Compal Confidential

NAWF2 M/B Schematics Document

Intel Penryn Processor with Cantiga + DDRIII + ICH9M+M92-S2 XT

2009-09-17

REV:1.0

Security Classification	Compal Secret Data		
Issued Date	2009/07/01	Deciphered Date	2010/07/01

THIS SHEET OF ENGINEERING DRAWING IS THE PROPRIETARY PROPERTY OF COMPAL ELECTRONICS, INC. AND CONTAINS CONFIDENTIAL AND TRADE SECRET INFORMATION. THIS SHEET MAY NOT BE TRANSFERED FROM THE CUSTODY OF THE COMPETENT DIVISION OF R&D DEPARTMENT EXCEPT AS AUTHORIZED BY COMPAL ELECTRONICS, INC. NEITHER THIS SHEET NOR THE INFORMATION IT CONTAINS MAY BE USED BY OR DISCLOSED TO ANY THIRD PARTY WITHOUT PRIOR WRITTEN CONSENT OF COMPAL ELECTRONICS, INC.

Compal Electronics, Inc.

Title	SCHEMATIC,MB A4853	
Size: Custom	Document Number: 401817	Rev: A
Date: Monday, September 28, 2009	Sheet 1 of 53	

Compal Confidential

Model Name : NAWF2
File Name : LA-4853P
P/N : DA60000FI00
P/N : DA60000FI10

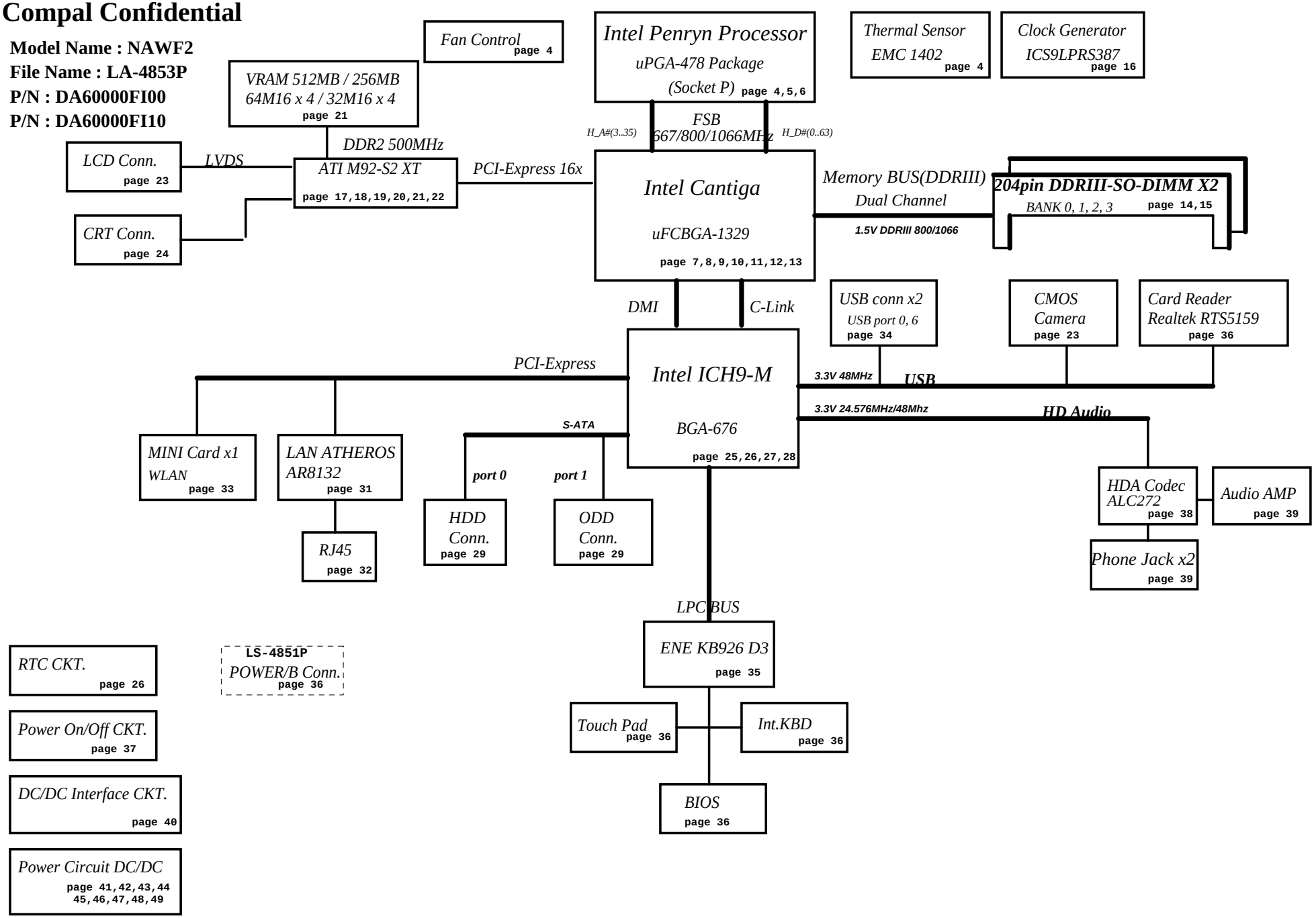

Security Classification	Compal Secret Data		Compal Electronics, Inc.
Issued Date	2009/07/01	Deciphered Date 2010/07/01	Title SCHEMATIC,MB A4853
THIS SHEET OF ENGINEERING DRAWING IS THE PROPRIETARY PROPERTY OF COMPAL ELECTRONICS, INC. AND CONTAINS CONFIDENTIAL AND TRADE SECRET INFORMATION. THIS SHEET MAY NOT BE TRANSFERED FROM THE CUSTODY OF THE COMPETENT DIVISION OF R&D DEPARTMENT EXCEPT AS AUTHORIZED BY COMPAL ELECTRONICS, INC. NEITHER THIS SHEET NOR THE INFORMATION IT CONTAINS MAY BE USED BY OR DISCLOSED TO ANY THIRD PARTY WITHOUT PRIOR WRITTEN CONSENT OF COMPAL ELECTRONICS, INC.			Size B / Document Number 401817 / Rev A
			Date: Monday, September 28, 2009 / Sheet 2 of 53

Voltage Rails

Power Plane	Description	S1	S3	S5
VIN	Adapter power supply (19V)	N/A	N/A	N/A
B+	AC or battery power rail for power circuit.	N/A	N/A	N/A
+CPU_CORE	Core voltage for CPU	ON	OFF	OFF
+0.75VS	0.75V switched power rail for DDR terminator	ON	OFF	OFF
+1.05VS	1.05V switched power rail	ON	OFF	OFF
+1.1VS	1.1V switched power rail	ON	OFF	OFF
+1.5V	1.5V power rail for DDR	ON	ON	OFF
+1.5VS	1.5V switched power rail	ON	OFF	OFF
+1.8V	1.8V power rail for GMCH LVDS	ON	ON	OFF
+1.8VS	1.8V switched power rail	ON	OFF	OFF
+2.5VS	2.5V switched power rail	ON	OFF	OFF
+3VALW	3.3V always on power rail	ON	ON	ON*
+3V	3.3V power rail for SB	ON	ON	OFF
+3V_LAN	3.3V power rail for LAN	ON	ON	ON
+3VS	3.3V switched power rail	ON	OFF	OFF
+5VALW	5V always on power rail	ON	ON	ON*
+5VS	5V switched power rail	ON	OFF	OFF
+VSB	VSB always on power rail	ON	ON	ON*
+RTCVCC	RTC power	ON	ON	ON
+VGA_CORE	Core voltage for GPU	ON	OFF	OFF

Note : ON* means that this power plane is ON only with AC power available, otherwise it is OFF.

External PCI Devices

Device	IDSEL#	REQ#/GNT#	Interrupts

EC SM Bus1 address

Device	Address
Smart Battery	0001 011X b
EEPROM(24C16/02)	1010 000X b

EC SM Bus2 address

Device	Address
EMC 1402-1	1001 100X b
GMT G781-1	1001 101X b

ICH9M SM Bus address

Device	Address
Clock Generator (ICS9LPRS387, SLG8SP556V)	1101 001Xb
DDR DIMM0	1001 000Xb
DDR DIMM2	1001 010Xb

STATE \ SIGNAL	SLP_S1#	SLP_S3#	SLP_S4#	SLP_S5#	+VALW	+V	+VS	Clock
Full ON	HIGH	HIGH	HIGH	HIGH	ON	ON	ON	ON
S1(Power On Suspend)	LOW	HIGH	HIGH	HIGH	ON	ON	ON	LOW
S3 (Suspend to RAM)	LOW	LOW	HIGH	HIGH	ON	ON	OFF	OFF
S4 (Suspend to Disk)	LOW	LOW	LOW	HIGH	ON	OFF	OFF	OFF
S5 (Soft OFF)	LOW	LOW	LOW	LOW	ON	OFF	OFF	OFF

Board ID / SKU ID Table for AD channel

Vcc	3.3V +/- 5%
Ra/Rc/Re	100K +/- 5%

Board ID	Rb / Rd / Rf	V_{AD_BID} min	V_{AD_BID} typ	V_{AD_BID} max
0	0	0 V	0 V	0 V
1	8.2K +/- 5%	0.216 V	0.250 V	0.289 V
2	18K +/- 5%	0.436 V	0.503 V	0.538 V
3	33K +/- 5%	0.712 V	0.819 V	0.875 V
4				
5				
6				
7				

BOARD ID Table

Board ID	PCB Revision
0	
1	0.1(PVT2)
2	1.0(Pre-MP)
3	
4	
5	
6	
7	

BTO Option Table

BTO Item	BOM Structure
GM45	GM@
8132	8132@

PCIE table

PCIE port1	
PCIE port2	Wireless Card
PCIE port3	PCIE LAN
PCIE port4	
PCIE port5	
PCIE port6	

USB table

EHCI1	UHCI1	Port0	MB USB Conn.
		Port1	
	UHCI2	Port2	
		Port3	CMOS Camera
	UHCI3	Port4	Card Reader
		Port5	
EHCI2	UHCI4	Port6	MB USB Conn.
		Port7	
	UHCI5	Port8	
		Port9	
	UHCI6	Port10	Wireless Card
		Port11	

SATA table

SATA port0	HDD
SATA port1	ODD
SATA port2	
SATA port3	
SATA port4	
SATA port5	

Security Classification	Compal Secret Data		Compal Electronics, Inc.
Issued Date	2009/07/01	Deciphered Date 2010/07/01	Title SCHEMATIC,MB A4853
			Size B / Document Number 401817 / Rev A
			Date: Monday, September 28, 2009 / Sheet 3 of 53

THIS SHEET OF ENGINEERING DRAWING IS THE PROPRIETARY PROPERTY OF COMPAL ELECTRONICS, INC. AND CONTAINS CONFIDENTIAL AND TRADE SECRET INFORMATION. THIS SHEET MAY NOT BE TRANSFERED FROM THE CUSTODY OF THE COMPETENT DIVISION OF R&D DEPARTMENT EXCEPT AS AUTHORIZED BY COMPAL ELECTRONICS, INC. NEITHER THIS SHEET NOR THE INFORMATION IT CONTAINS MAY BE USED BY OR DISCLOSED TO ANY THIRD PARTY WITHOUT PRIOR WRITTEN CONSENT OF COMPAL ELECTRONICS, INC.

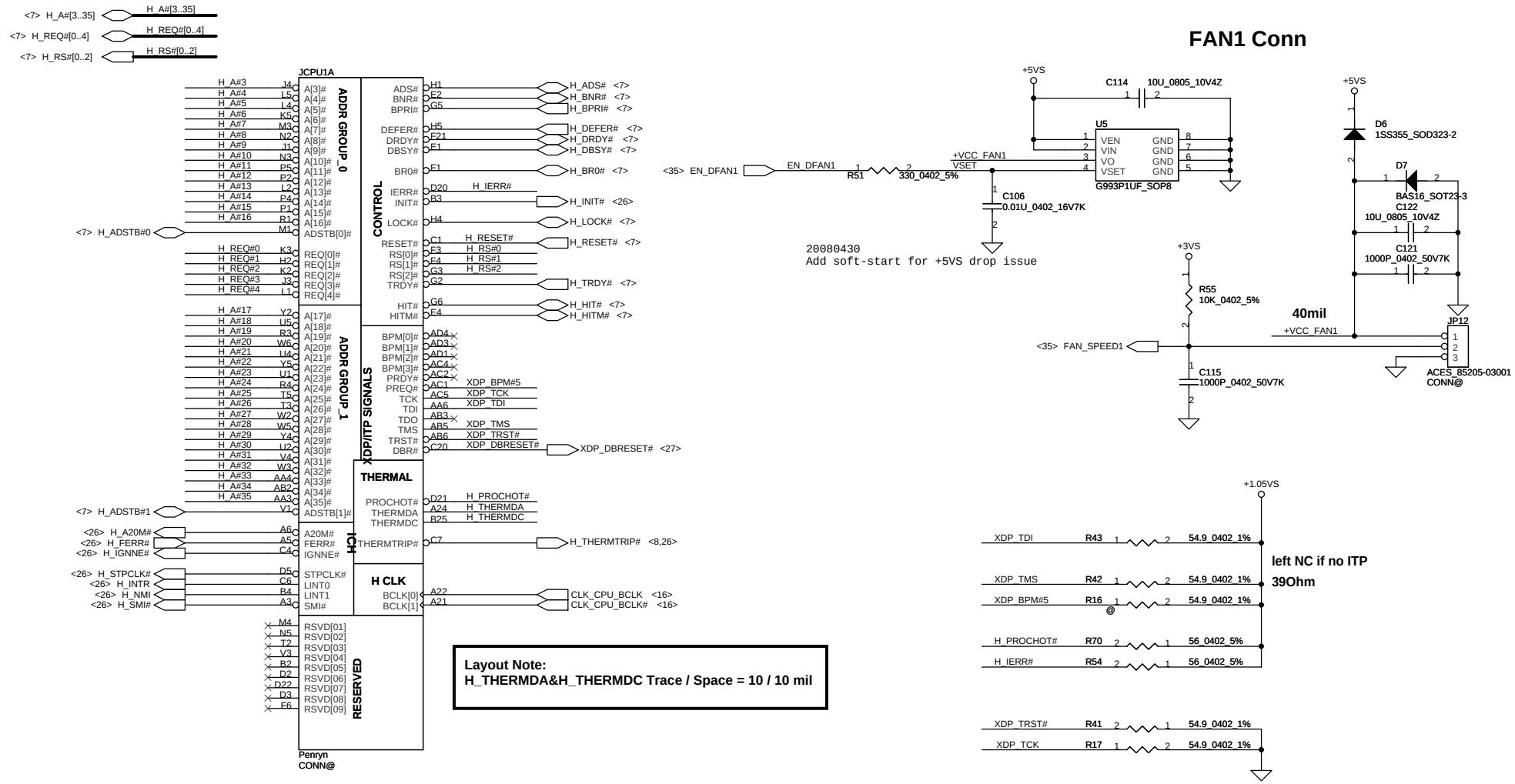

BSEL2	BSEL1	BSEL0	BCLK
0	0	0	266
0	1	0	200
0	1	1	166

Security Classification	Compal Secret Data		
Issued Date	2009/01/21	Deciphered Date	2010/01/21

THIS SHEET OF ENGINEERING DRAWING IS THE PROPRIETARY PROPERTY OF COMPAL ELECTRONICS, INC. AND CONTAINS CONFIDENTIAL AND TRADE SECRET INFORMATION. THIS SHEET MAY NOT BE TRANSFERED FROM THE CUSTODY OF THE COMPETENT DIVISION OF R&D DEPARTMENT EXCEPT AS AUTHORIZED BY COMPAL ELECTRONICS, INC. NEITHER THIS SHEET NOR THE INFORMATION IT CONTAINS MAY BE USED BY OR DISCLOSED TO ANY THIRD PARTY WITHOUT PRIOR WRITTEN CONSENT OF COMPAL ELECTRONICS, INC.

Compal Electronics, Inc.

Title: SCHEMATIC,MB A4853

Size: B | Document Number: 401817 | Rev: A

Date: Monday, September 28, 2009 | Sheet 4 of 53

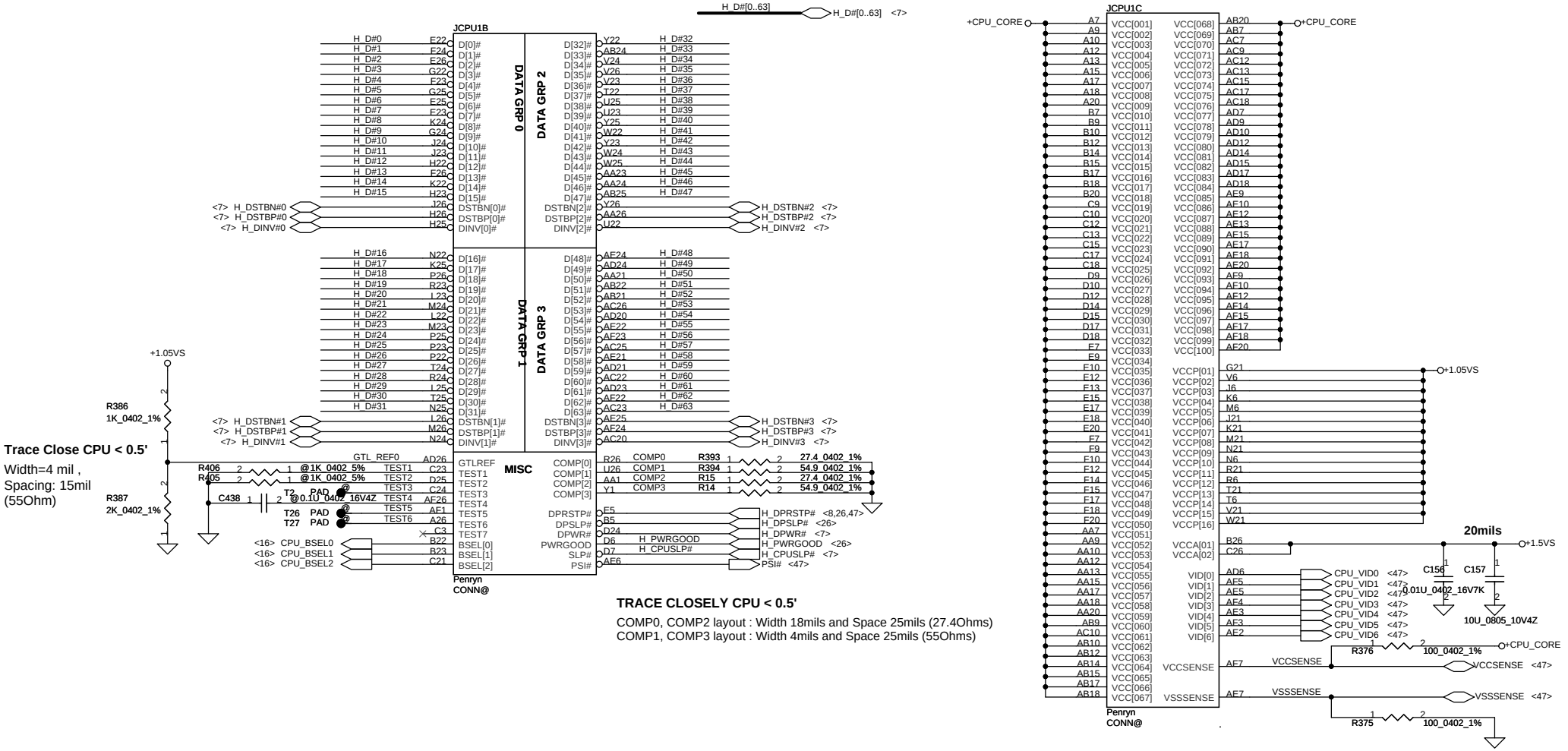

Security Classification	Compal Secret Data		
Issued Date	2009/07/01	Deciphered Date	2010/07/01

THIS SHEET OF ENGINEERING DRAWING IS THE PROPRIETARY PROPERTY OF COMPAL ELECTRONICS, INC. AND CONTAINS CONFIDENTIAL AND TRADE SECRET INFORMATION. THIS SHEET MAY NOT BE TRANSFERED FROM THE CUSTODY OF THE COMPETENT DIVISION OF R&D DEPARTMENT EXCEPT AS AUTHORIZED BY COMPAL ELECTRONICS, INC. NEITHER THIS SHEET NOR THE INFORMATION IT CONTAINS MAY BE USED BY OR DISCLOSED TO ANY THIRD PARTY WITHOUT PRIOR WRITTEN CONSENT OF COMPAL ELECTRONICS, INC.

Compal Electronics, Inc.

Title: SCHEMATIC,MB A4853

Size: B | Document Number: 401817 | Rev: A

Date: Monday, September 28, 2009 | Sheet 5 of 53

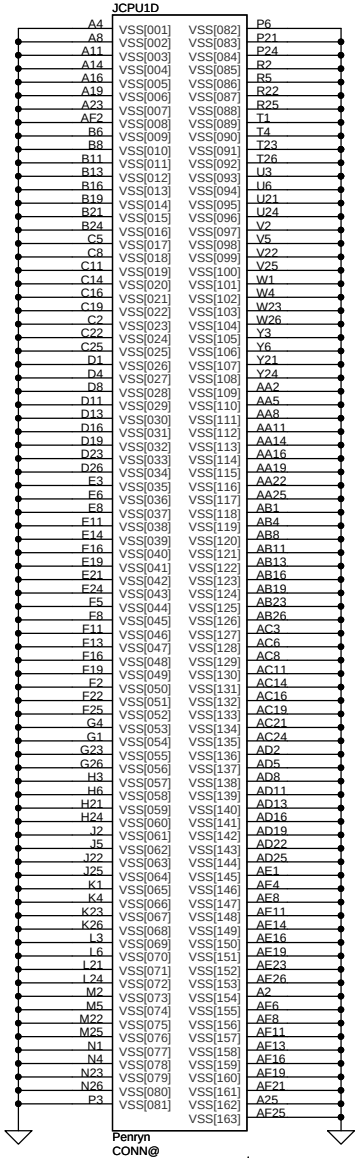

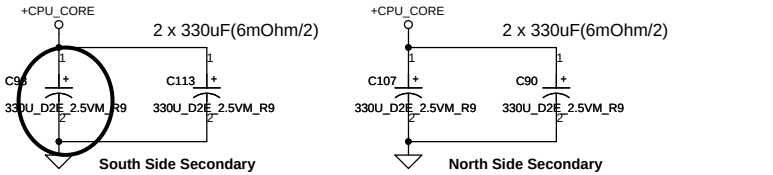

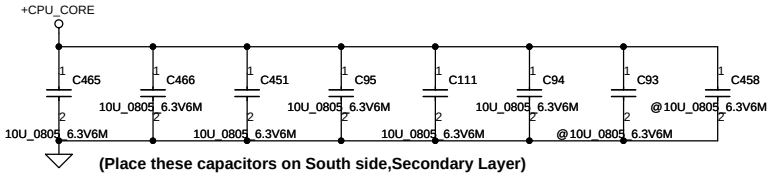

(Place these capacitors on South side,Secondary Layer)

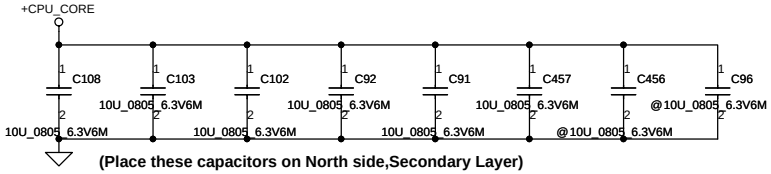

(Place these capacitors on North side,Secondary Layer)

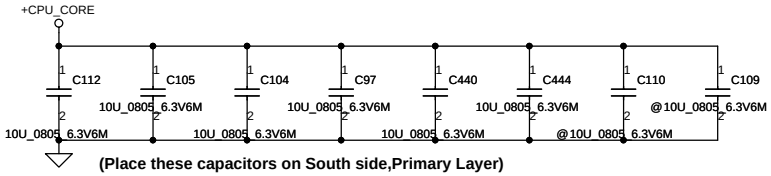

(Place these capacitors on South side,Primary Layer)

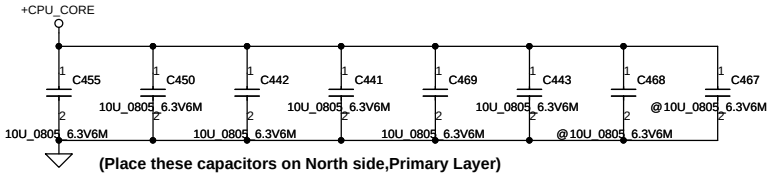

(Place these capacitors on North side,Primary Layer)

+CPU-CORE Decoupling	C,uF	ESR, mohm	ESL,nH
SPCAP,Polymer	4X330uF	6m ohm/4	1.8nH/6
MLCC 0805 X5R	32X22uF 32X10uF	3m ohm/32 3m ohm/32	0.6nH/32 0.6nH/32

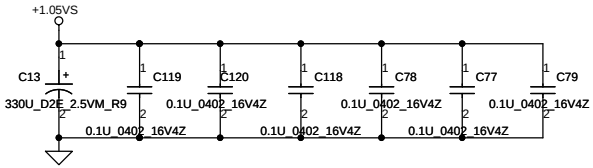

Security Classification	Compal Secret Data			Compal Electronics, Inc.
Issued Date	2009/07/01	Deciphered Date	2010/07/01	Title: SCHEMATIC,MB A4853
				Size: B / Document Number: 401817 / Rev: A
				Date: Monday, September 28, 2009 / Sheet 6 of 53

THIS SHEET OF ENGINEERING DRAWING IS THE PROPRIETARY PROPERTY OF COMPAL ELECTRONICS, INC. AND CONTAINS CONFIDENTIAL AND TRADE SECRET INFORMATION. THIS SHEET MAY NOT BE TRANSFERED FROM THE CUSTODY OF THE COMPETENT DIVISION OF R&D DEPARTMENT EXCEPT AS AUTHORIZED BY COMPAL ELECTRONICS, INC. NEITHER THIS SHEET NOR THE INFORMATION IT CONTAINS MAY BE USED BY OR DISCLOSED TO ANY THIRD PARTY WITHOUT PRIOR WRITTEN CONSENT OF COMPAL ELECTRONICS, INC.

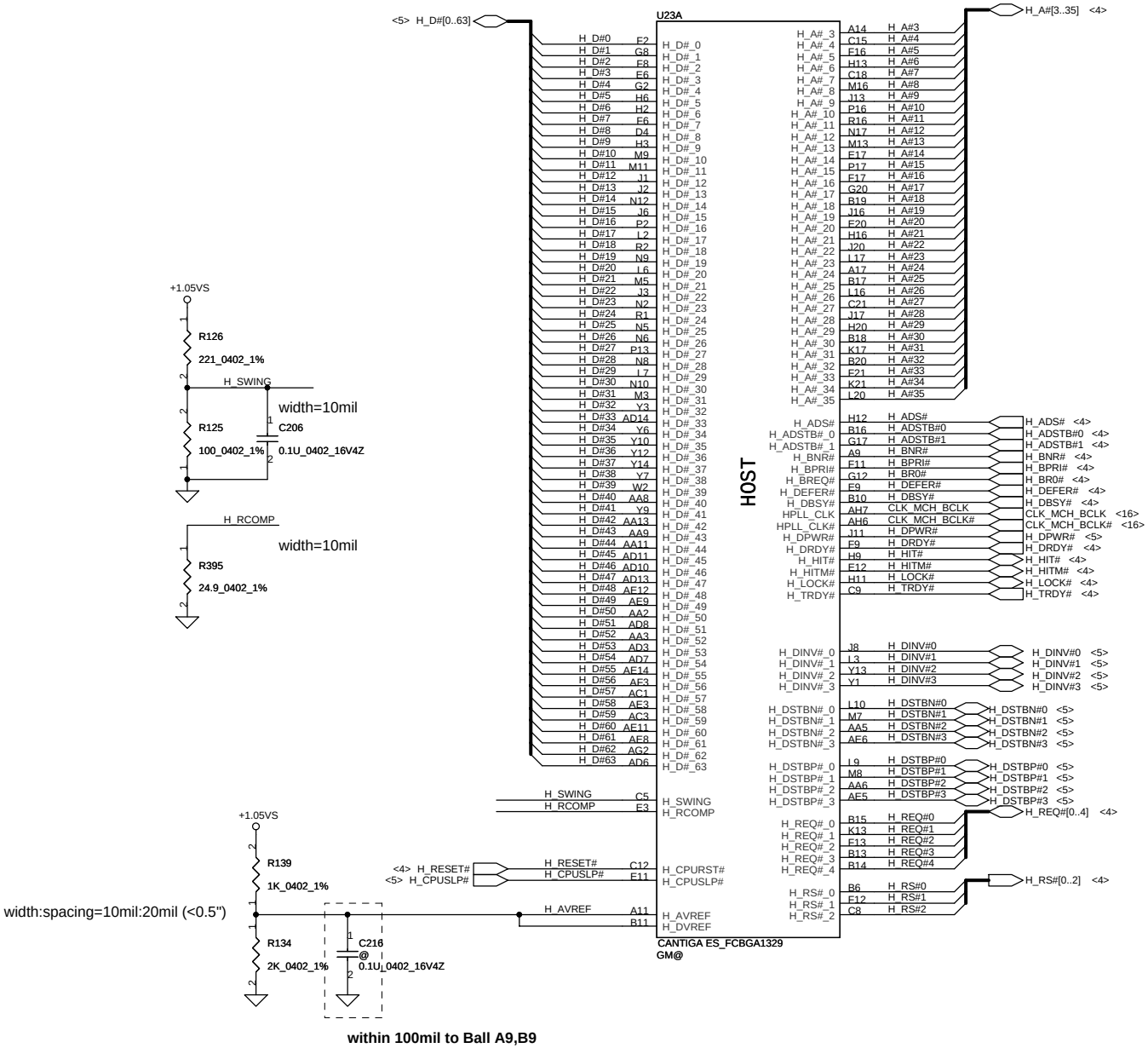

Security Classification	Compal Secret Data		
Issued Date	2009/07/01	Deciphered Date	2010/07/01

THIS SHEET OF ENGINEERING DRAWING IS THE PROPRIETARY PROPERTY OF COMPAL ELECTRONICS, INC. AND CONTAINS CONFIDENTIAL AND TRADE SECRET INFORMATION. THIS SHEET MAY NOT BE TRANSFERED FROM THE CUSTODY OF THE COMPETENT DIVISION OF R&D DEPARTMENT EXCEPT AS AUTHORIZED BY COMPAL ELECTRONICS, INC. NEITHER THIS SHEET NOR THE INFORMATION IT CONTAINS MAY BE USED BY OR DISCLOSED TO ANY THIRD PARTY WITHOUT PRIOR WRITTEN CONSENT OF COMPAL ELECTRONICS, INC.

Compal Electronics, Inc.

Title: SCHEMATIC,MB A4853

Size: B | Document Number: 401817 | Rev: A

Date: Monday, September 28, 2009 | Sheet 7 of 53

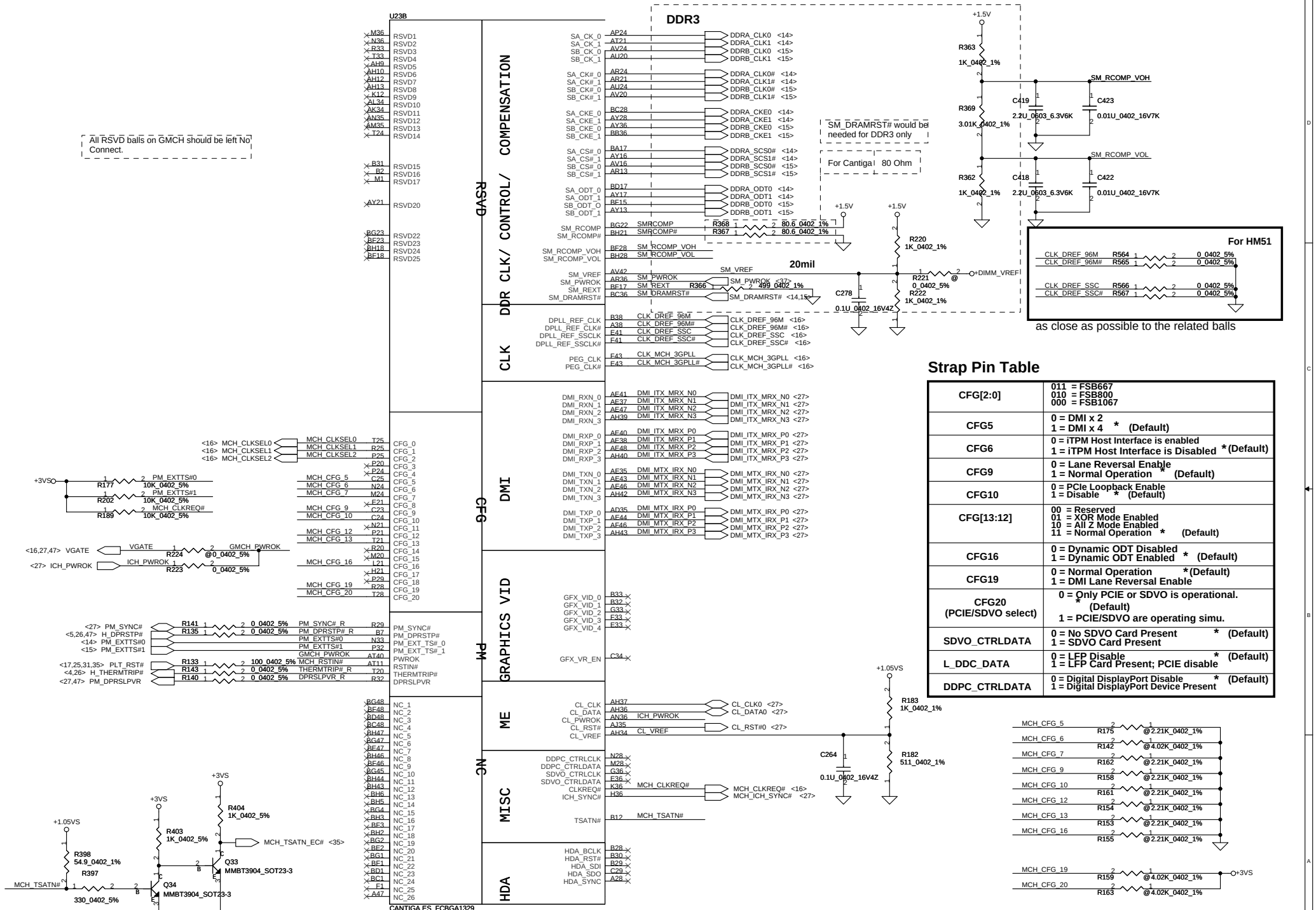

Strap Pin Table

CFG[2:0]	011 = FSB667 010 = FSB800 000 = FSB1067
CFG5	0 = DMI x 2 1 = DMI x 4 * (Default)
CFG6	0 = iTPM Host Interface is enabled 1 = iTPM Host Interface is Disabled *(Default)
CFG9	0 = Lane Reversal Enable 1 = Normal Operation * (Default)
CFG10	0 = PCIe Loopback Enable 1 = Disable * (Default)
CFG[13:12]	00 = Reserved 01 = XOR Mode Enabled 10 = All Z Mode Enabled 11 = Normal Operation * (Default)
CFG16	0 = Dynamic ODT Disabled 1 = Dynamic ODT Enabled * (Default)
CFG19	0 = Normal Operation *(Default) 1 = DMI Lane Reversal Enable
CFG20 (PCIE/SDVO select)	0 = Only PCIE or SDVO is operational. * (Default) 1 = PCIE/SDVO are operating simu.
SDVO_CTRLDATA	0 = No SDVO Card Present * (Default) 1 = SDVO Card Present
L_DDC_DATA	0 = LFP Disable * (Default) 1 = LFP Card Present; PCIE disable
DDPC_CTRLDATA	0 = Digital DisplayPort Disable * (Default) 1 = Digital DisplayPort Device Present

Security Classification	Compal Secret Data		
Issued Date	2009/07/01	Deciphered Date	2010/07/01

THIS SHEET OF ENGINEERING DRAWING IS THE PROPRIETARY PROPERTY OF COMPAL ELECTRONICS, INC. AND CONTAINS CONFIDENTIAL AND TRADE SECRET INFORMATION. THIS SHEET MAY NOT BE TRANSFERED FROM THE CUSTODY OF THE COMPETENT DIVISION OF R&D DEPARTMENT EXCEPT AS AUTHORIZED BY COMPAL ELECTRONICS, INC. NEITHER THIS SHEET NOR THE INFORMATION IT CONTAINS MAY BE USED BY OR DISCLOSED TO ANY THIRD PARTY WITHOUT PRIOR WRITTEN CONSENT OF COMPAL ELECTRONICS, INC.

Compal Electronics, Inc.

Title: SCHEMATIC,MB A4853

Size: Custom | Document Number: 401817 | Rev: A

Date: Monday, September 28, 2009 | Sheet 8 of 53

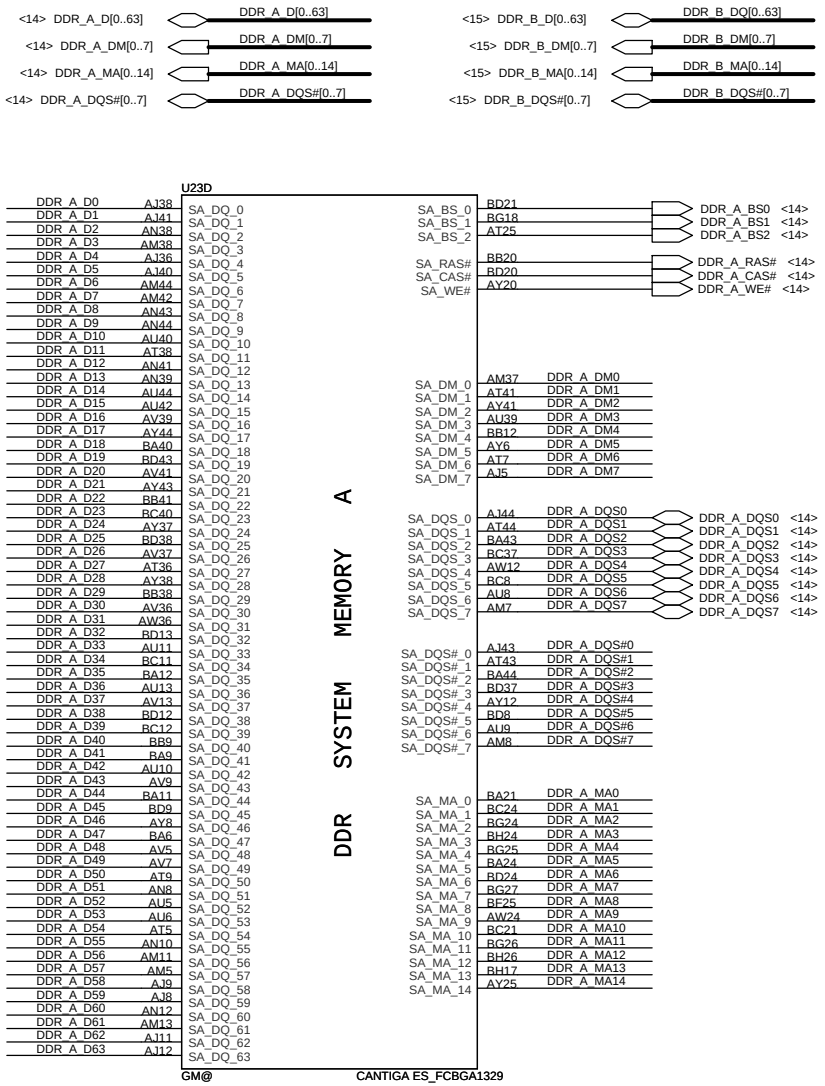

Security Classification	Compal Secret Data		
Issued Date	2009/07/01	Deciphered Date	2010/07/01

THIS SHEET OF ENGINEERING DRAWING IS THE PROPRIETARY PROPERTY OF COMPAL ELECTRONICS, INC. AND CONTAINS CONFIDENTIAL AND TRADE SECRET INFORMATION. THIS SHEET MAY NOT BE TRANSFERED FROM THE CUSTODY OF THE COMPETENT DIVISION OF R&D DEPARTMENT EXCEPT AS AUTHORIZED BY COMPAL ELECTRONICS, INC. NEITHER THIS SHEET NOR THE INFORMATION IT CONTAINS MAY BE USED BY OR DISCLOSED TO ANY THIRD PARTY WITHOUT PRIOR WRITTEN CONSENT OF COMPAL ELECTRONICS, INC.

Compal Electronics, Inc.

Title: SCHEMATIC,MB A4853

Size: B | Document Number: 401817 | Rev: A

Date: Monday, September 28, 2009 | Sheet 9 of 53

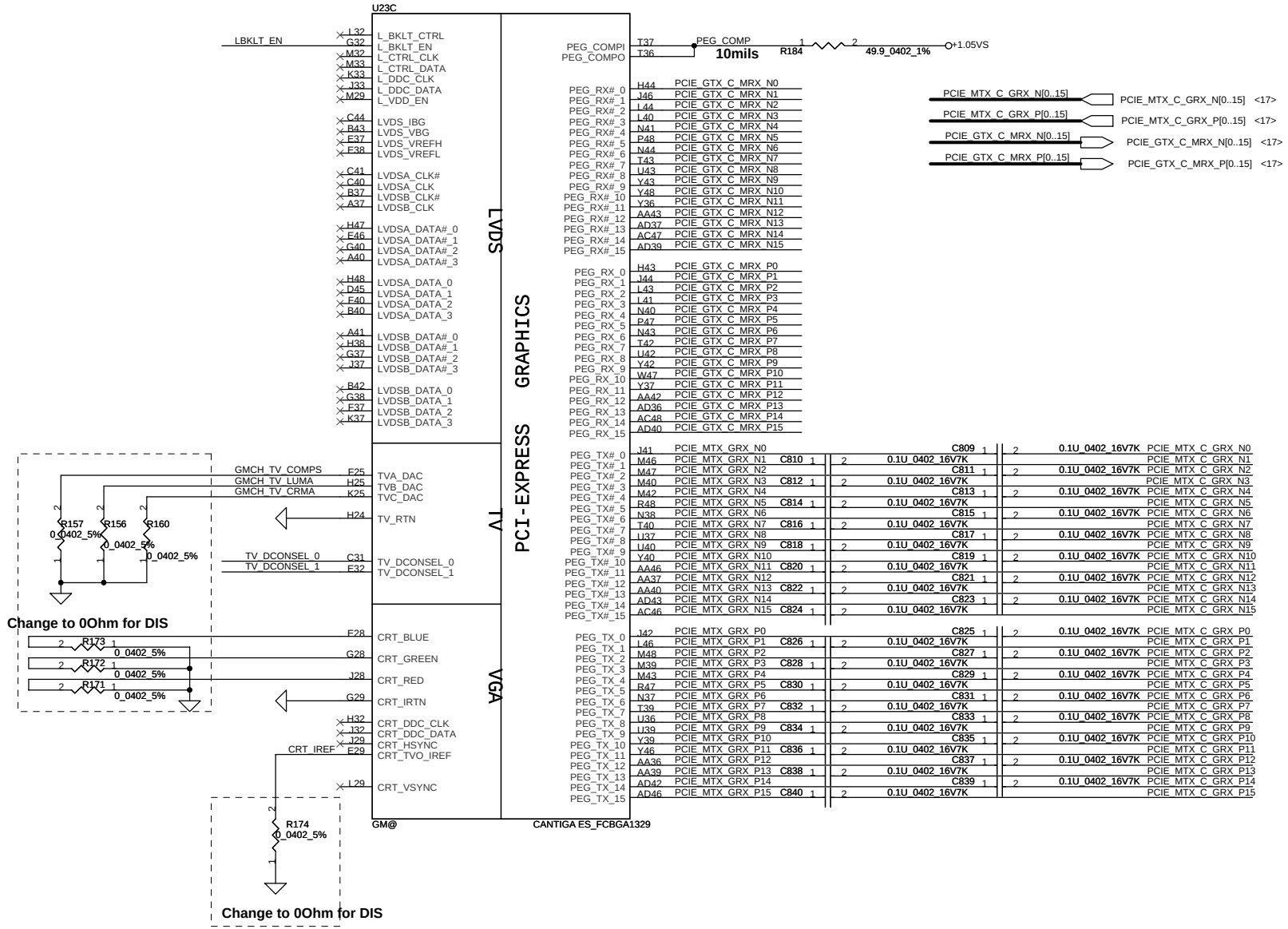

R186	0_0402_5%	TV_DCONSEL_0	@	
R176	0_0402_5%	TV_DCONSEL_1	@	
R179	100K_0402_5%	LBKLT_EN		

Security Classification	Compal Secret Data		
Issued Date	2009/07/01	Deciphered Date	2010/07/01

THIS SHEET OF ENGINEERING DRAWING IS THE PROPRIETARY PROPERTY OF COMPAL ELECTRONICS, INC. AND CONTAINS CONFIDENTIAL AND TRADE SECRET INFORMATION. THIS SHEET MAY NOT BE TRANSFERED FROM THE CUSTODY OF THE COMPETENT DIVISION OF R&D DEPARTMENT EXCEPT AS AUTHORIZED BY COMPAL ELECTRONICS, INC. NEITHER THIS SHEET NOR THE INFORMATION IT CONTAINS MAY BE USED BY OR DISCLOSED TO ANY THIRD PARTY WITHOUT PRIOR WRITTEN CONSENT OF COMPAL ELECTRONICS, INC.

Compal Electronics, Inc.

Title: SCHEMATIC,MB A4853

Size: Custom | Document Number: 401817 | Rev: A

Date: Monday, September 28, 2009 | Sheet 10 of 53

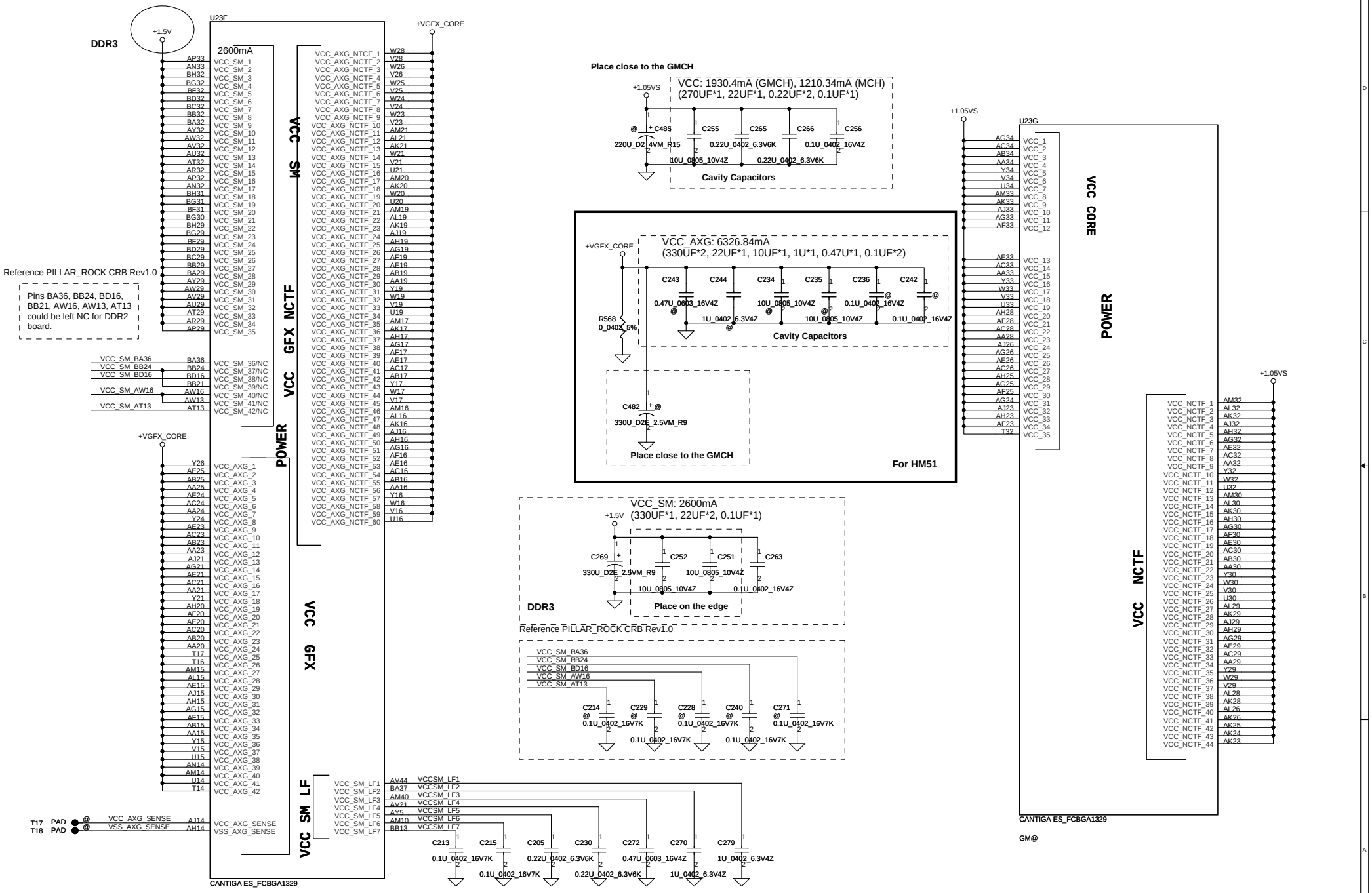

Security Classification	Compal Secret Data			Compal Electronics, Inc.
Issued Date	2009/07/01	Deciphered Date	2010/07/01	Title: SCHEMATIC,MB A4853
				Size: Custom; Document Number: 401817; Rev: A
				Date: Monday, September 28, 2009; Sheet 11 of 53

THIS SHEET OF ENGINEERING DRAWING IS THE PROPRIETARY PROPERTY OF COMPAL ELECTRONICS, INC. AND CONTAINS CONFIDENTIAL AND TRADE SECRET INFORMATION. THIS SHEET MAY NOT BE TRANSFERED FROM THE CUSTODY OF THE COMPETENT DIVISION OF R&D DEPARTMENT EXCEPT AS AUTHORIZED BY COMPAL ELECTRONICS, INC. NEITHER THIS SHEET NOR THE INFORMATION IT CONTAINS MAY BE USED BY OR DISCLOSED TO ANY THIRD PARTY WITHOUT PRIOR WRITTEN CONSENT OF COMPAL ELECTRONICS, INC.

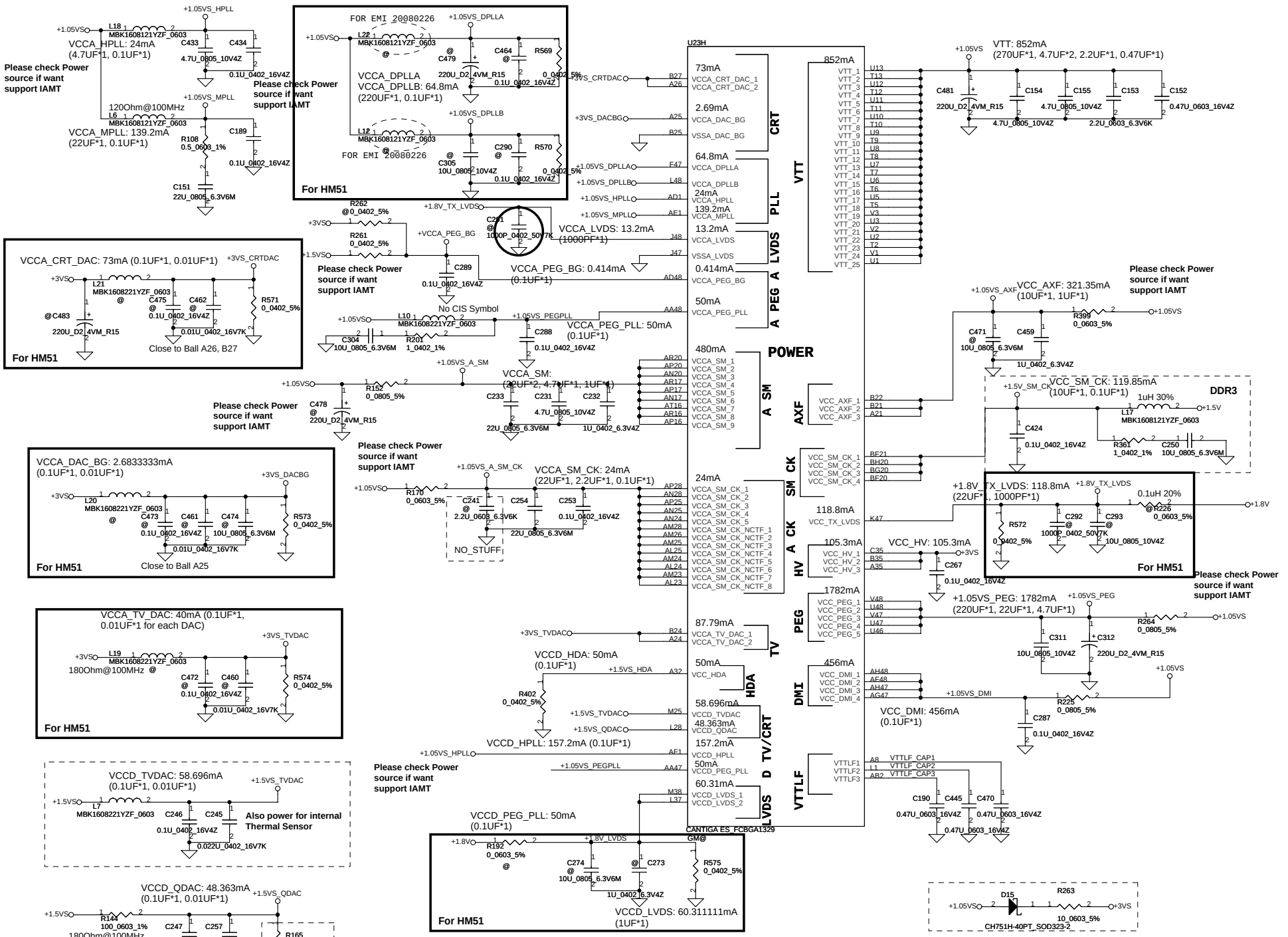

Security Classification	Compal Secret Data			Compal Electronics, Inc.
Issued Date	2009/07/01	Deciphered Date	2010/07/01	Title: SCHEMATIC,MB A4853

THIS SHEET OF ENGINEERING DRAWING IS THE PROPRIETARY PROPERTY OF COMPAL ELECTRONICS, INC. AND CONTAINS CONFIDENTIAL AND TRADE SECRET INFORMATION. THIS SHEET MAY NOT BE TRANSFERED FROM THE CUSTODY OF THE COMPETENT DIVISION OF R&D DEPARTMENT EXCEPT AS AUTHORIZED BY COMPAL ELECTRONICS, INC. NEITHER THIS SHEET NOR THE INFORMATION IT CONTAINS MAY BE USED BY OR DISCLOSED TO ANY THIRD PARTY WITHOUT PRIOR WRITTEN CONSENT OF COMPAL ELECTRONICS, INC.

Size	Document Number	Rev
Custom	401817	A

Date: Monday, September 28, 2009 | Sheet 12 of 53

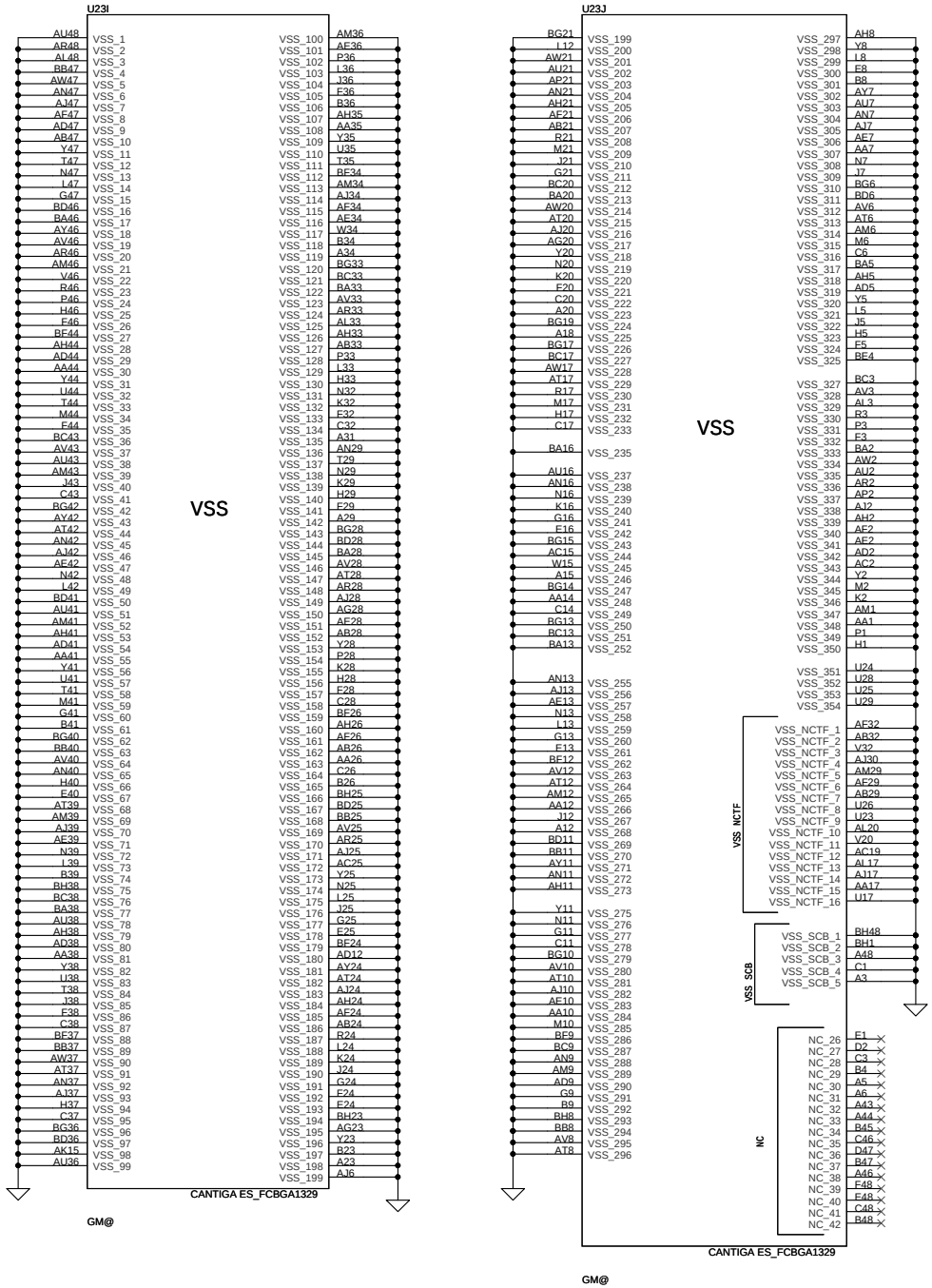

Security Classification	Compal Secret Data			Compal Electronics, Inc.
Issued Date	2009/07/01	Deciphered Date	2010/07/01	Title: SCHEMATIC,MB A4853
THIS SHEET OF ENGINEERING DRAWING IS THE PROPRIETARY PROPERTY OF COMPAL ELECTRONICS, INC. AND CONTAINS CONFIDENTIAL AND TRADE SECRET INFORMATION. THIS SHEET MAY NOT BE TRANSFERED FROM THE CUSTODY OF THE COMPETENT DIVISION OF R&D DEPARTMENT EXCEPT AS AUTHORIZED BY COMPAL ELECTRONICS, INC. NEITHER THIS SHEET NOR THE INFORMATION IT CONTAINS MAY BE USED BY OR DISCLOSED TO ANY THIRD PARTY WITHOUT PRIOR WRITTEN CONSENT OF COMPAL ELECTRONICS, INC.				Size: Custom; Document Number: 401817; Rev: A
				Date: Monday, September 28, 2009; Sheet 13 of 53

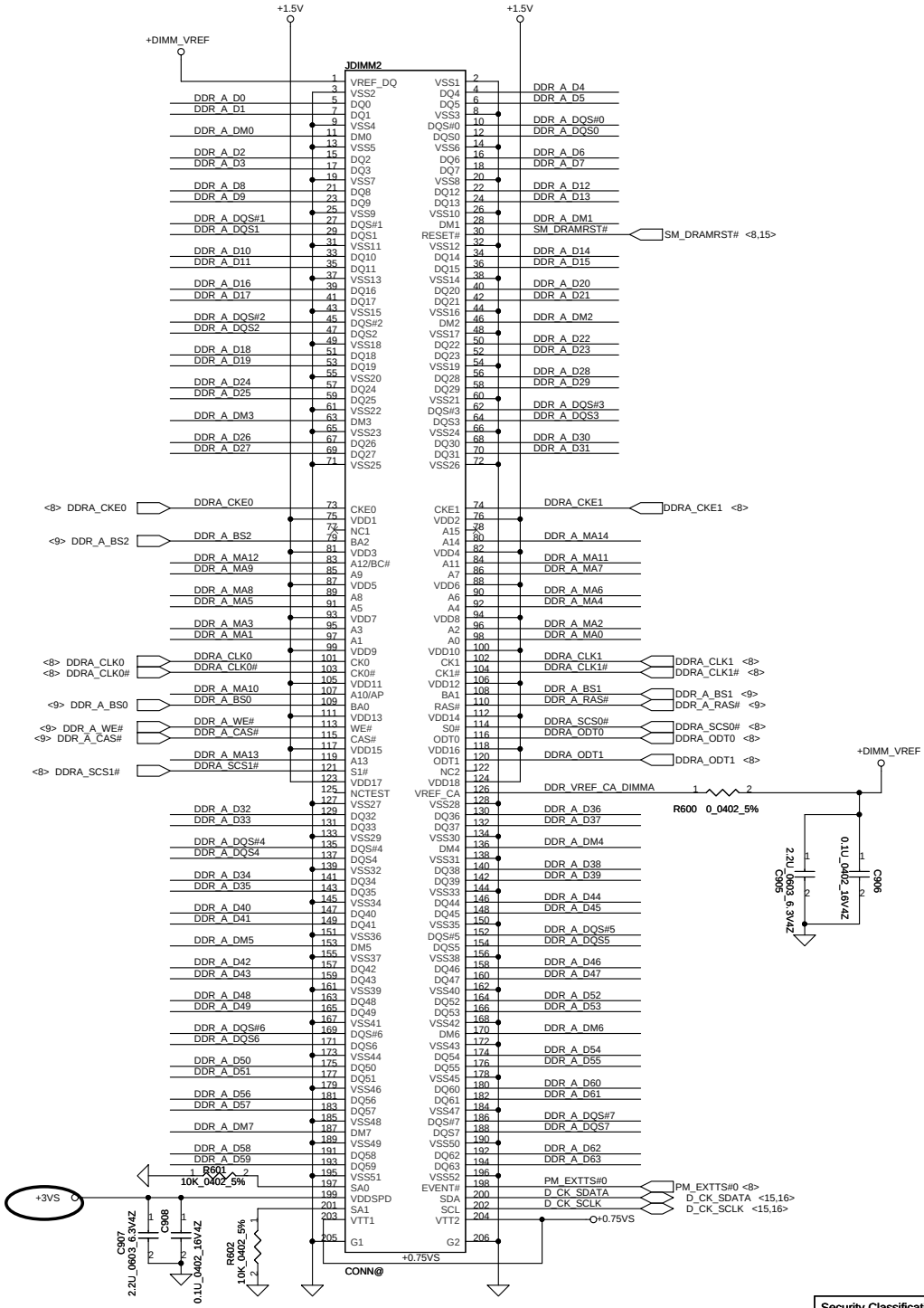

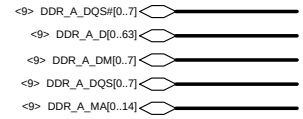

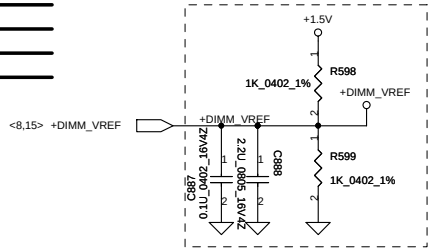

Layout Note:
Place near JDIMM2

Layout Note: Place these 4 Caps near Command and Control signals of DIMMA

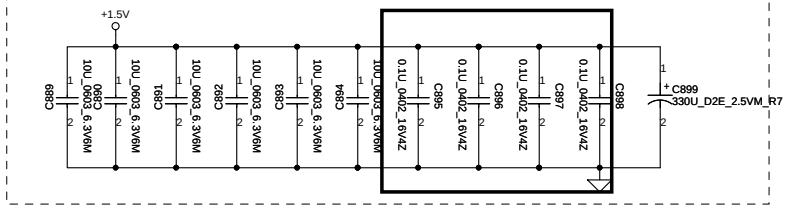

Layout Note:
Place near JDIMM2.203 & JDIMM2.204

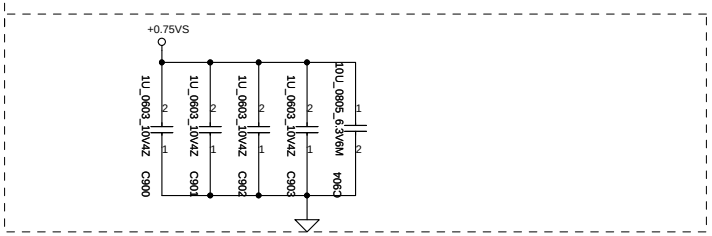

DIMM0 REV H:5.2mm (BOT)

Security Classification	Compal Secret Data			Compal Electronics, Inc.
Issued Date	2009/07/01	Deciphered Date	2010/07/01	Title: SCHEMATIC,MB A4853
THIS SHEET OF ENGINEERING DRAWING IS THE PROPRIETARY PROPERTY OF COMPAL ELECTRONICS, INC. AND CONTAINS CONFIDENTIAL AND TRADE SECRET INFORMATION. THIS SHEET MAY NOT BE TRANSFERED FROM THE CUSTODY OF THE COMPETENT DIVISION OF R&D DEPARTMENT EXCEPT AS AUTHORIZED BY COMPAL ELECTRONICS, INC. NEITHER THIS SHEET NOR THE INFORMATION IT CONTAINS MAY BE USED BY OR DISCLOSED TO ANY THIRD PARTY WITHOUT PRIOR WRITTEN CONSENT OF COMPAL ELECTRONICS, INC.				Size: B / Document Number: 401817 / Rev: A
				Date: Monday, September 28, 2009 / Sheet 14 of 53

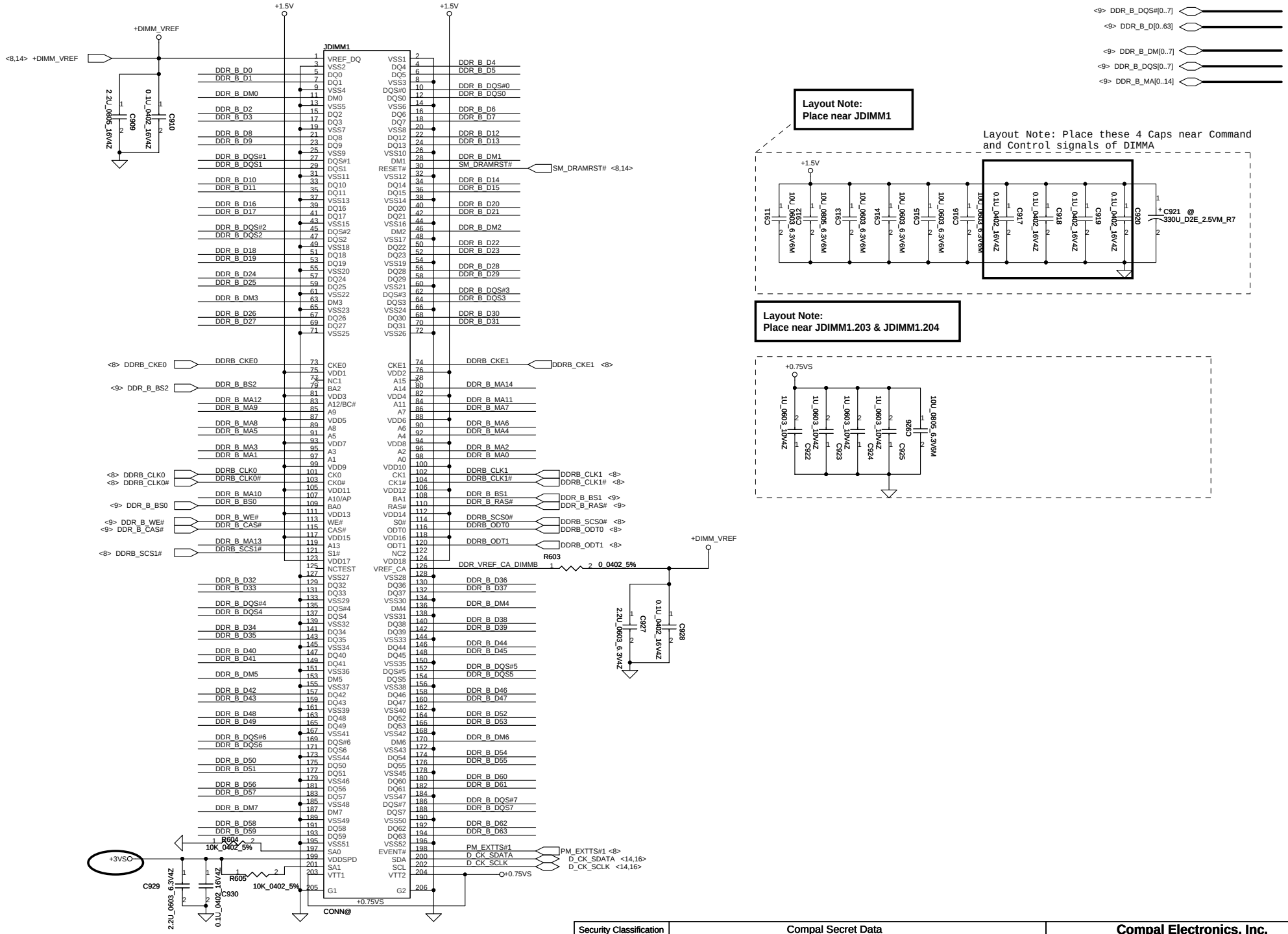

DIMM1 REV H:9.2mm (BOT)

Security Classification	Compal Secret Data		
Issued Date	2009/07/01	Deciphered Date	2010/07/01

THIS SHEET OF ENGINEERING DRAWING IS THE PROPRIETARY PROPERTY OF COMPAL ELECTRONICS, INC. AND CONTAINS CONFIDENTIAL AND TRADE SECRET INFORMATION. THIS SHEET MAY NOT BE TRANSFERED FROM THE CUSTODY OF THE COMPETENT DIVISION OF R&D DEPARTMENT EXCEPT AS AUTHORIZED BY COMPAL ELECTRONICS, INC. NEITHER THIS SHEET NOR THE INFORMATION IT CONTAINS MAY BE USED BY OR DISCLOSED TO ANY THIRD PARTY WITHOUT PRIOR WRITTEN CONSENT OF COMPAL ELECTRONICS, INC.

Compal Electronics, Inc.

Title: SCHEMATIC,MB A4853

Size: B | Document Number: 401817 | Rev: A

Date: Monday, September 28, 2009 | Sheet 15 of 53

Clock Generator

FSLC CLKSEL2	FSLB CLKSEL1	FSLA CLKSEL0	CPU MHz	SRC MHz	PCI MHz
0	0	0	266	100	33.3
0	1	0	200	100	33.3
0	1	1	166	100	33.3

Table : ICS9LPRS387

CLK_REQ#	Control	Free-Run
CR#_10(WLAN)	PCIEX10	PCIEX0
CR#_6(MCH)	PCIEX6	PCIEX1
CR#_4(NEW CARD)	PCIEX4	
CR#_9(MINI CARDII)	PCIEX9	

SRC7(VGA_CLK): Discrete VGA[Enable]

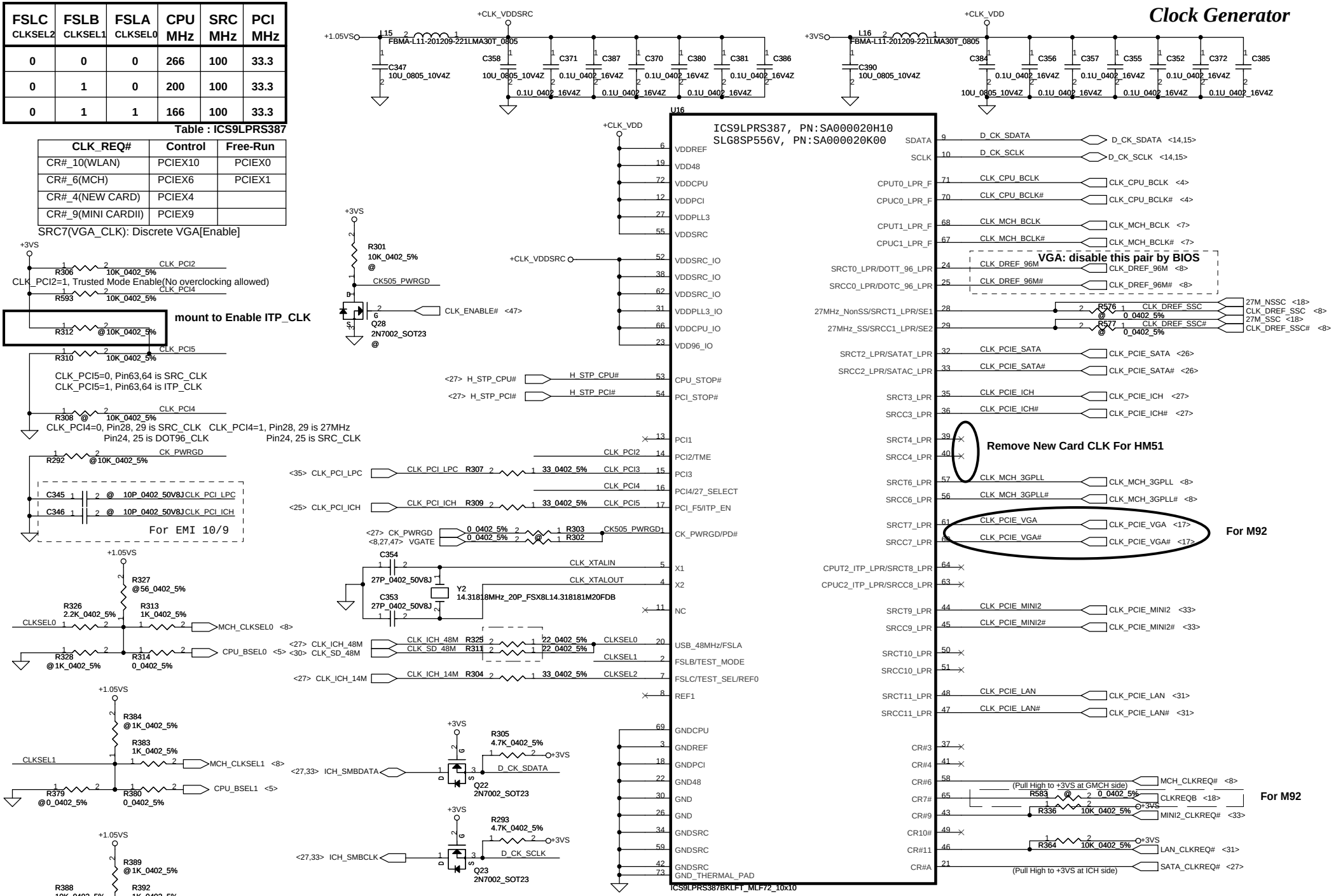

Security Classification	Compal Secret Data		
Issued Date	2009/07/01	Deciphered Date	2010/07/01

THIS SHEET OF ENGINEERING DRAWING IS THE PROPRIETARY PROPERTY OF COMPAL ELECTRONICS, INC. AND CONTAINS CONFIDENTIAL AND TRADE SECRET INFORMATION. THIS SHEET MAY NOT BE TRANSFERED FROM THE CUSTODY OF THE COMPETENT DIVISION OF R&D DEPARTMENT EXCEPT AS AUTHORIZED BY COMPAL ELECTRONICS, INC. NEITHER THIS SHEET NOR THE INFORMATION IT CONTAINS MAY BE USED BY OR DISCLOSED TO ANY THIRD PARTY WITHOUT PRIOR WRITTEN CONSENT OF COMPAL ELECTRONICS, INC.

Compal Electronics, Inc.

Title: SCHEMATIC,MB A4853

Size: Custom | Document Number: 401817 | Rev: A

Date: Monday, September 28, 2009 | Sheet 16 of 53

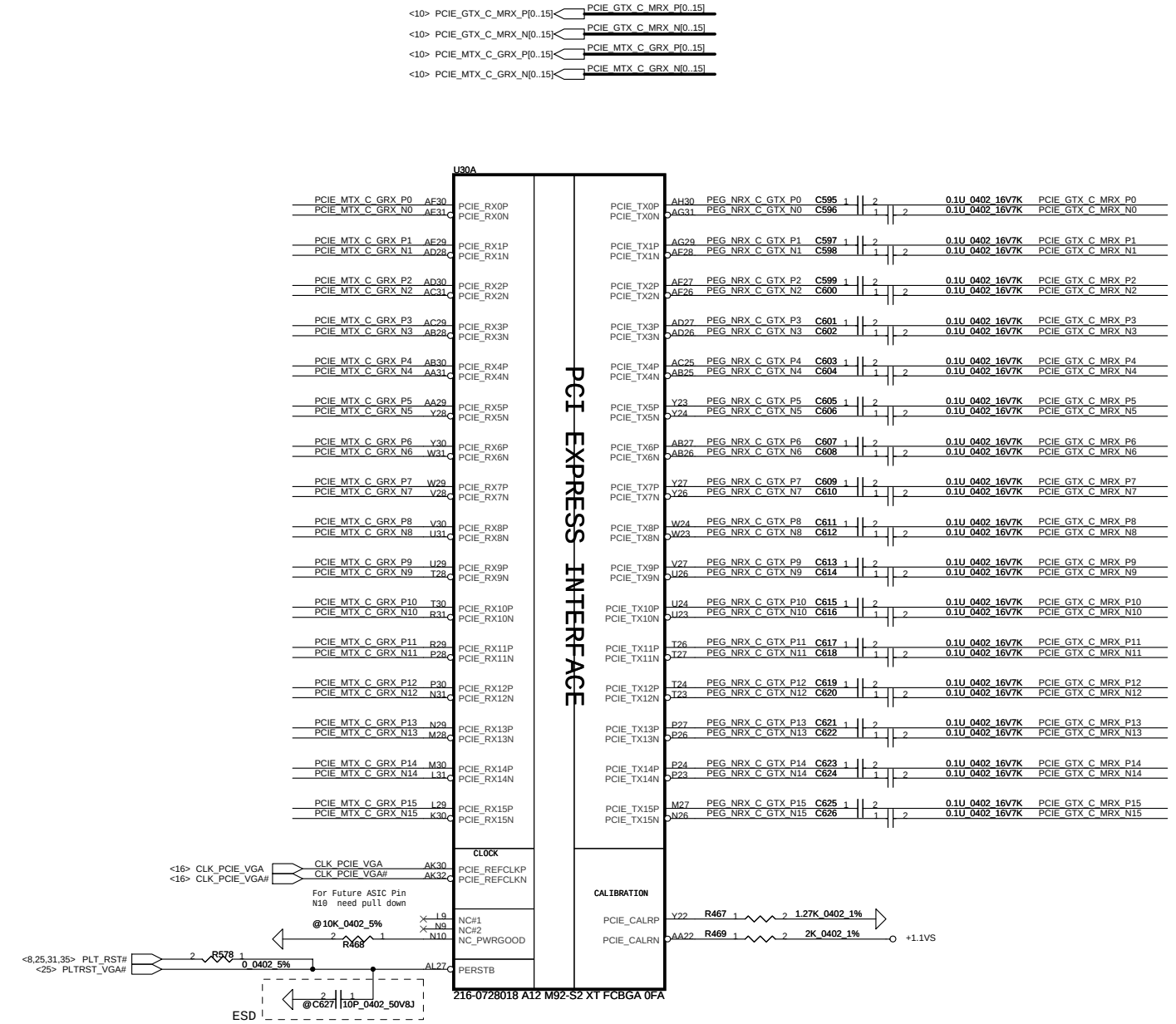

Security Classification	Compal Secret Data			Compal Electronics, Inc.
Issued Date	2009/07/01	Deciphered Date	2010/07/01	Title: SCHEMATIC,MB A4853
THIS SHEET OF ENGINEERING DRAWING IS THE PROPRIETARY PROPERTY OF COMPAL ELECTRONICS, INC. AND CONTAINS CONFIDENTIAL AND TRADE SECRET INFORMATION. THIS SHEET MAY NOT BE TRANSFERED FROM THE CUSTODY OF THE COMPETENT DIVISION OF R&D DEPARTMENT EXCEPT AS AUTHORIZED BY COMPAL ELECTRONICS, INC. NEITHER THIS SHEET NOR THE INFORMATION IT CONTAINS MAY BE USED BY OR DISCLOSED TO ANY THIRD PARTY WITHOUT PRIOR WRITTEN CONSENT OF COMPAL ELECTRONICS, INC.				Size: Document Number: 401817 Rev: A
				Date: Monday, September 28, 2009 Sheet 17 of 53

For M92-S2: DO NOT Install any Component in this Box.

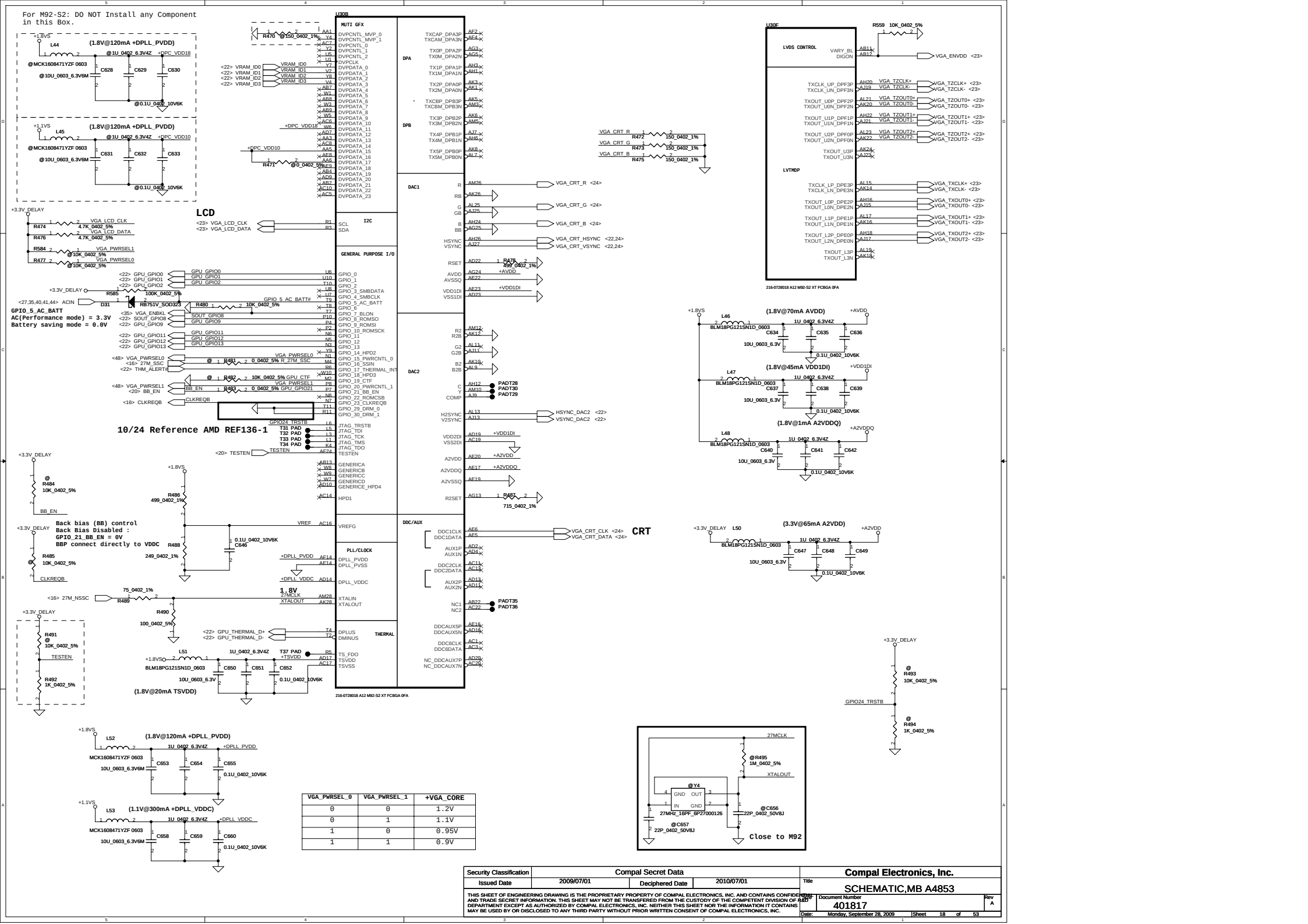

VGA_PWRSEL_0	VGA_PWRSEL_1	+VGA_CORE
0	0	1.2V
0	1	1.1V
1	0	0.95V
1	1	0.9V

Security Classification	Compal Secret Data		
Issued Date	2009/07/01	Deciphered Date	2010/07/01

THIS SHEET OF ENGINEERING DRAWING IS THE PROPRIETARY PROPERTY OF COMPAL ELECTRONICS, INC. AND CONTAINS CONFIDENTIAL AND TRADE SECRET INFORMATION. THIS SHEET MAY NOT BE TRANSFERED FROM THE CUSTODY OF THE COMPETENT DIVISION OF R&D DEPARTMENT EXCEPT AS AUTHORIZED BY COMPAL ELECTRONICS, INC. NEITHER THIS SHEET NOR THE INFORMATION IT CONTAINS MAY BE USED BY OR DISCLOSED TO ANY THIRD PARTY WITHOUT PRIOR WRITTEN CONSENT OF COMPAL ELECTRONICS, INC.

Compal Electronics, Inc.

Title: SCHEMATIC,MB A4853

Size: D | Document Number: 401817 | Rev: A

Date: Monday, September 28, 2009 | Sheet 18 of 53

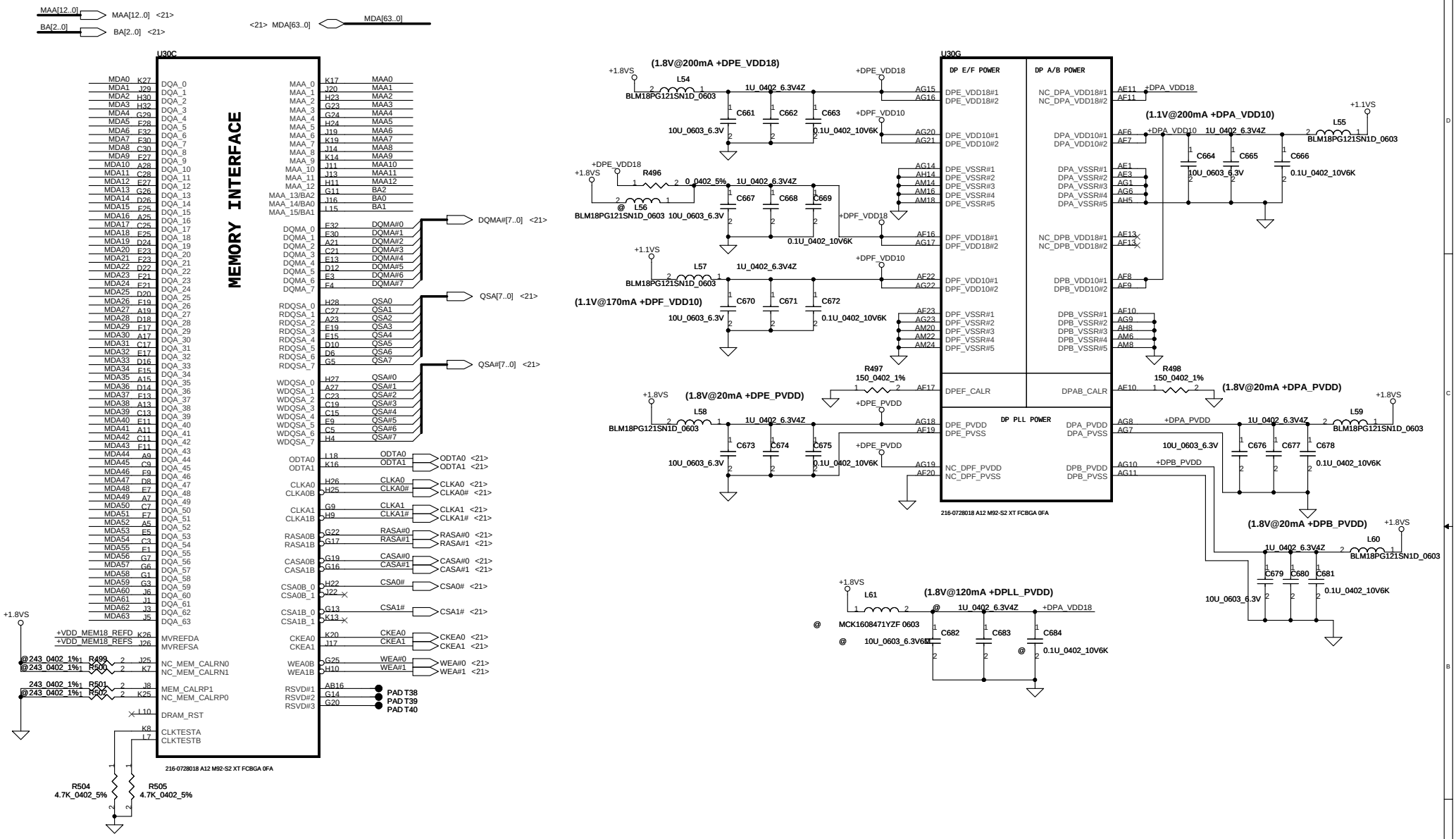

Security Classification	Compal Secret Data			Compal Electronics, Inc.
Issued Date	2009/07/01	Deciphered Date	2010/07/01	Title: SCHEMATIC,MB A4853
				Size: Document Number: 401817 — Rev: A
				Date: Monday, September 28, 2009 — Sheet 19 of 53

THIS SHEET OF ENGINEERING DRAWING IS THE PROPRIETARY PROPERTY OF COMPAL ELECTRONICS, INC. AND CONTAINS CONFIDENTIAL AND TRADE SECRET INFORMATION. THIS SHEET MAY NOT BE TRANSFERED FROM THE CUSTODY OF THE COMPETENT DIVISION OF R&D DEPARTMENT EXCEPT AS AUTHORIZED BY COMPAL ELECTRONICS, INC. NEITHER THIS SHEET NOR THE INFORMATION IT CONTAINS MAY BE USED BY OR DISCLOSED TO ANY THIRD PARTY WITHOUT PRIOR WRITTEN CONSENT OF COMPAL ELECTRONICS, INC.

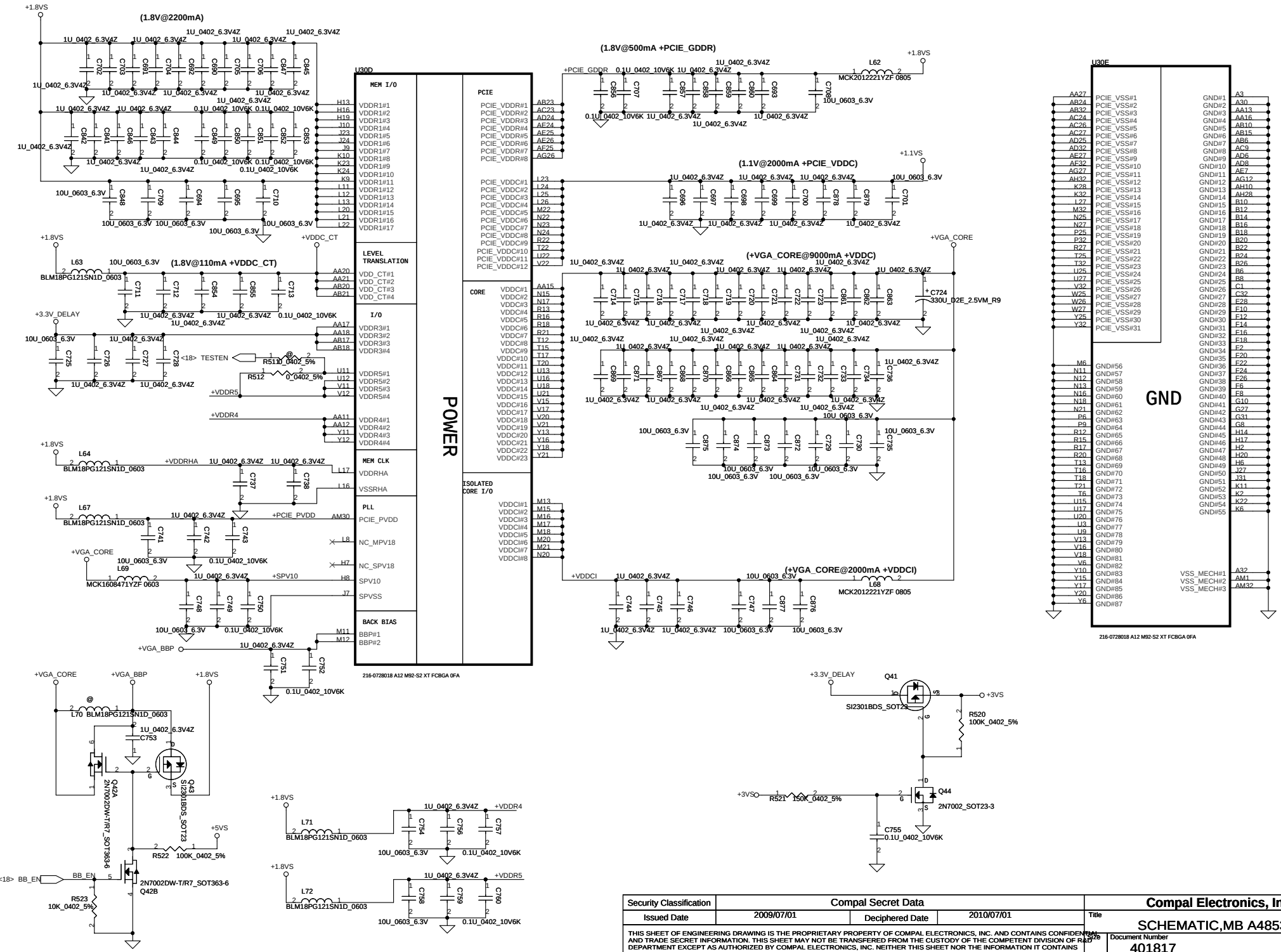

Security Classification	Compal Secret Data			Compal Electronics, Inc.
Issued Date	2009/07/01	Deciphered Date	2010/07/01	Title: SCHEMATIC,MB A4853
				Size: Document Number: 401817 — Rev: A
				Date: Monday, September 28, 2009 — Sheet 20 of 53

THIS SHEET OF ENGINEERING DRAWING IS THE PROPRIETARY PROPERTY OF COMPAL ELECTRONICS, INC. AND CONTAINS CONFIDENTIAL AND TRADE SECRET INFORMATION. THIS SHEET MAY NOT BE TRANSFERED FROM THE CUSTODY OF THE COMPETENT DIVISION OF R&D DEPARTMENT EXCEPT AS AUTHORIZED BY COMPAL ELECTRONICS, INC. NEITHER THIS SHEET NOR THE INFORMATION IT CONTAINS MAY BE USED BY OR DISCLOSED TO ANY THIRD PARTY WITHOUT PRIOR WRITTEN CONSENT OF COMPAL ELECTRONICS, INC.

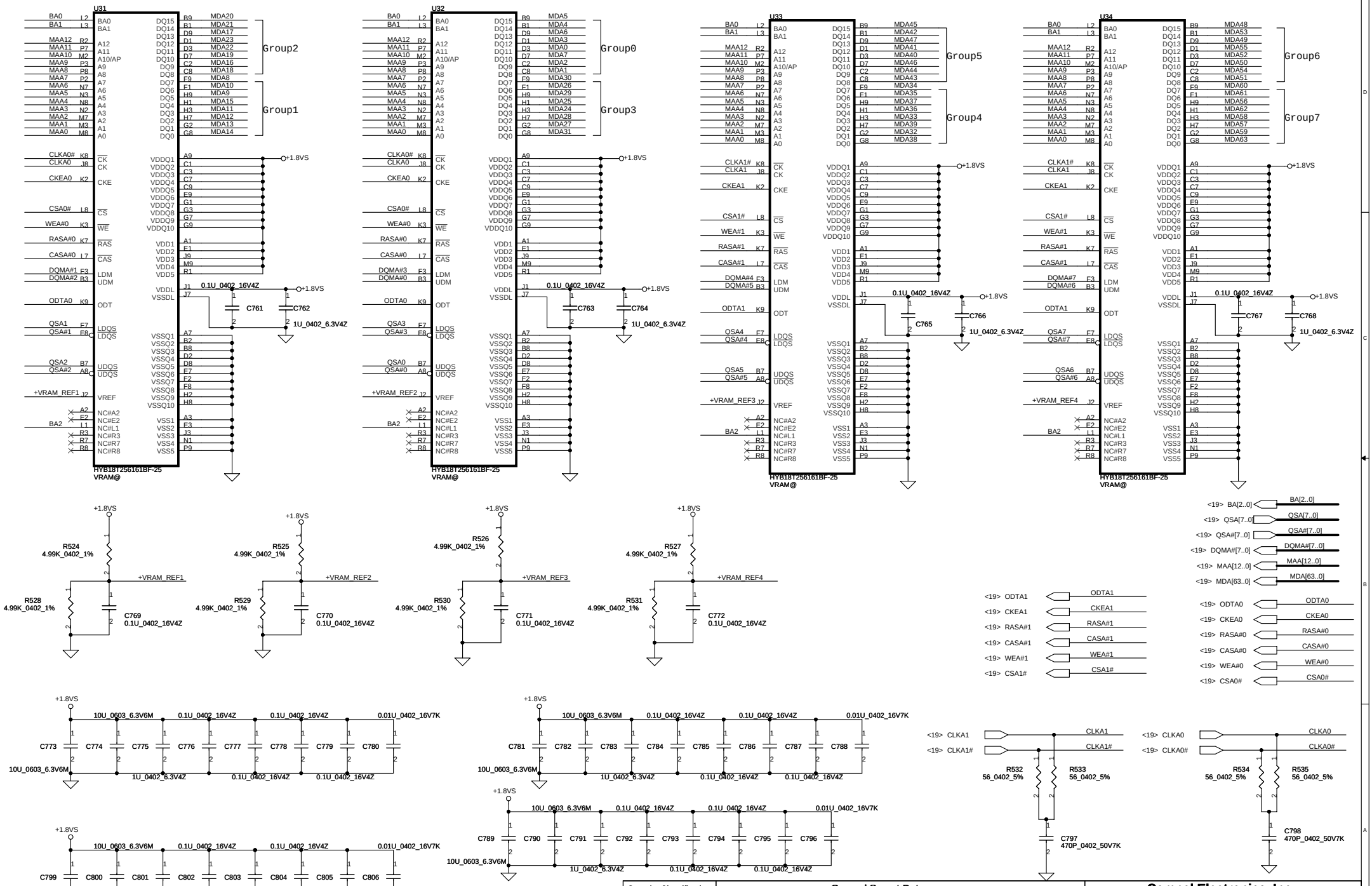

Security Classification	Compal Secret Data			Compal Electronics, Inc.
Issued Date	2009/07/01	Deciphered Date	2010/07/01	Title: SCHEMATIC,MB A4853
				Size: Document Number: 401817 Rev: A
				Date: Monday, September 28, 2009 Sheet 21 of 53

THIS SHEET OF ENGINEERING DRAWING IS THE PROPRIETARY PROPERTY OF COMPAL ELECTRONICS, INC. AND CONTAINS CONFIDENTIAL AND TRADE SECRET INFORMATION. THIS SHEET MAY NOT BE TRANSFERED FROM THE CUSTODY OF THE COMPETENT DIVISION OF R&D DEPARTMENT EXCEPT AS AUTHORIZED BY COMPAL ELECTRONICS, INC. NEITHER THIS SHEET NOR THE INFORMATION IT CONTAINS MAY BE USED BY OR DISCLOSED TO ANY THIRD PARTY WITHOUT PRIOR WRITTEN CONSENT OF COMPAL ELECTRONICS, INC.

STRAPS

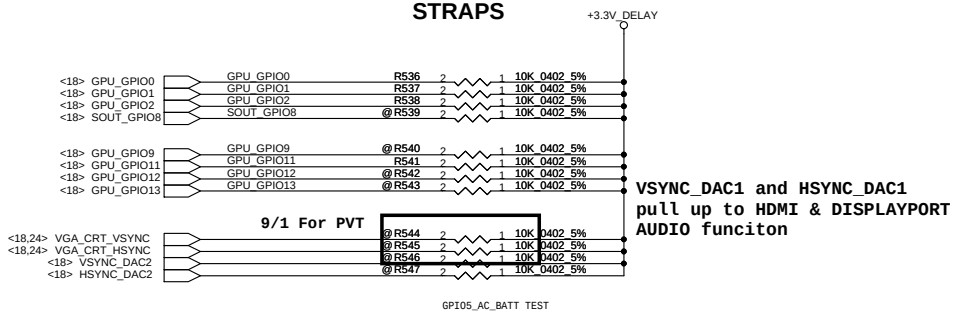

VSYNC_DAC1 and HSYNC_DAC1 pull up to HDMI & DISPLAYPORT AUDIO funciton

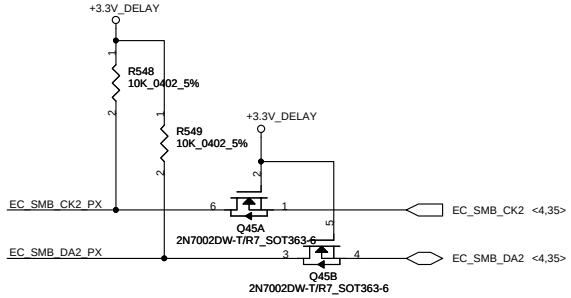

CONFIGURATION STRAPS

ALLOW FOR PULLUP PADS FOR THESE STRAPS AND IF THESE GPIOS ARE USED, THEY MUST NOT CONFLICT DURING RESET

STRAPS	PIN	DESCRIPTION OF DEFAULT SETTINGS	RECOMMENDED SETTINGS
TX_PWRS_ENB	GPIO0	PCIE FULL TX OUTPUT SWING	1
TX_DEEMPH_EN	GPIO1	PCIE TRANSMITTER DE-EMPHASIS ENABLED	1
BIF_GEN2_EN_A	GPIO2	PCIE GNE2 ENABLED	1
BIF_CLK_PM_EN	GPIO8	BIF_CLK_PM_EN	0
BIF_VGA DIS	GPIO9	VGA ENABLED	0
BIF_RX_PLL_CALIB_BP	GPIO21		0
BIOS_ROM_EN	GPIO_22_ROMCSB		1
ROMIDCFG(2:0)	GPIO[13:11]	BIF_RX_PLL_CALIB_BP	0 0 1
VIP_DEVICE_STRAP_ENA	V2SYNC	ENABLE EXTERNAL BIOS ROM	0
SMS_EN_HARD	H2SYNC	SERIAL ROM TYPE OR MEMORY APERTURE SIZE SELECT	0
CCBYPASS	GENERICC	IGNORE VIP DEVICE STRAPS	0
AUD[1] AUD[0]	HSYNC VSYNC	AUD[1] AUD[0] 0 0 No audio function 0 1 Audio for DisplayPort and HDMI if dongle is detected 1 0 Audio for DisplayPort only 1 1 Audio for both DisplayPort and HDMI	X X

AMD RESERVED CONFIGURATION STRAPS

ALLOW FOR PULLUP PADS FOR THESE STRAPS AND IF THESE GPIOS ARE USED, THEY MUST NOT CONFLICT DURING RESET

H2SYNC GENERICC

PULLUP PADS ARE NOT REQUIRED FOR THESE STRAPS BUT IF THESE GPIOS ARE USED, THEY MUST NOT CONFLICT DURING RESET

GPIO_28_TDO GPIO21_BB_EN

VGA Thermal Sensor

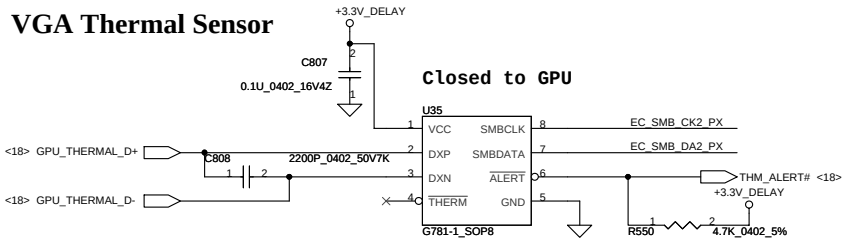

Change to SA007810210

Address 1001 101X b

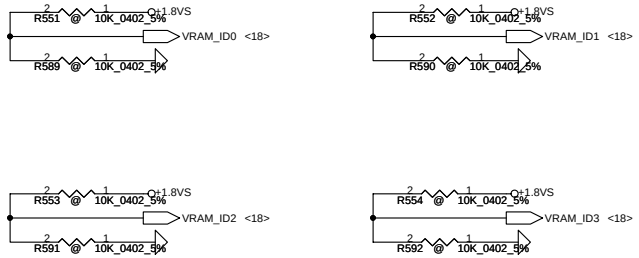

VRAM_ID0=VRAM_ID0_0
VRAM_ID1=VRAM_ID1_1
VRAM_ID2=VRAM_ID2_2
VRAM_ID3=VRAM_ID3_3

STRAPS	PIN	GPU	Project	VRAM size	Vendor Part Number#	Compal Part Number#	VRAM_ID 3,2,1,0
VRAM_ID[3:0]	DVPDATA (3,2,1,0)	M92 S2-XT		256MB(x4)	Hynix 32Mx16 1.8V	SA00002DL10	1 0 0 0
				512MB(x4)	Hynix 64Mx16 1.8V	SA00002UH20	0 0 0 1
				512MB(x4)	ATI 64Mx16 1.8V	SA00003LT10	0 0 1 0
				512MB(x4)	Samsung 64Mx16 1.8V (E-die)	SA000031O10	0 1 0 0

THIS SHEET OF ENGINEERING DRAWING IS THE PROPRIETARY PROPERTY OF COMPAL ELECTRONICS, INC. AND CONTAINS CONFIDENTIAL AND TRADE SECRET INFORMATION. THIS SHEET MAY NOT BE TRANSFERED FROM THE CUSTODY OF THE COMPETENT DIVISION OF R&D DEPARTMENT EXCEPT AS AUTHORIZED BY COMPAL ELECTRONICS, INC. NEITHER THIS SHEET NOR THE INFORMATION IT CONTAINS MAY BE USED BY OR DISCLOSED TO ANY THIRD PARTY WITHOUT PRIOR WRITTEN CONSENT OF COMPAL ELECTRONICS, INC.

Security Classification	Compal Secret Data		Compal Electronics, Inc.
Issued Date	2009/07/01	Deciphered Date 2010/07/01	Title: SCHEMATIC,MB A4853
			Size: Document Number: 401817 — Rev: A
			Date: Monday, September 28, 2009 — Sheet 22 of 53

LCD POWER CIRCUIT

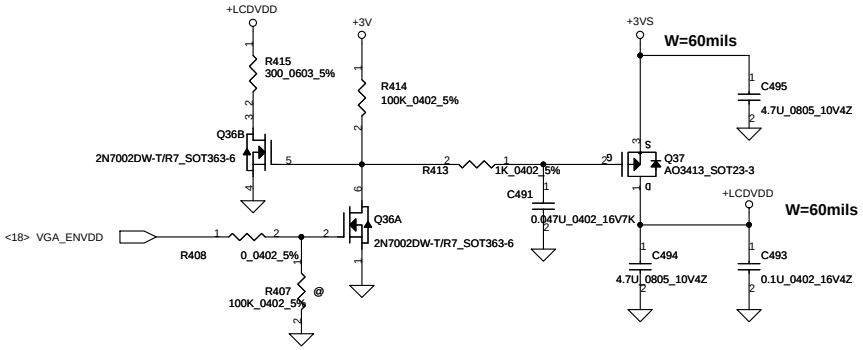

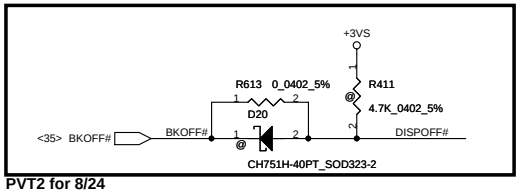

PVT2 for 8/24

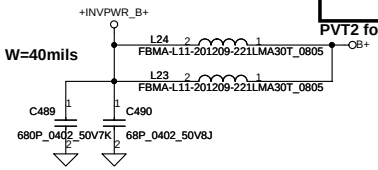

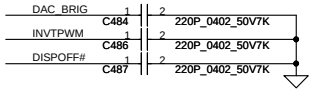

LCD/PANEL BD. Conn.

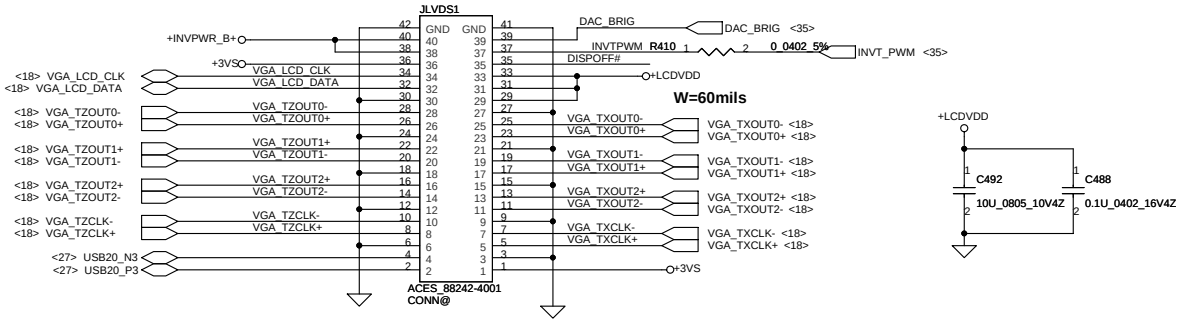

Security Classification	Compal Secret Data			Compal Electronics, Inc.
Issued Date	2009/07/01	Deciphered Date	2010/07/01	Title: SCHEMATIC,MB A4853
THIS SHEET OF ENGINEERING DRAWING IS THE PROPRIETARY PROPERTY OF COMPAL ELECTRONICS, INC. AND CONTAINS CONFIDENTIAL AND TRADE SECRET INFORMATION. THIS SHEET MAY NOT BE TRANSFERED FROM THE CUSTODY OF THE COMPETENT DIVISION OF R&D DEPARTMENT EXCEPT AS AUTHORIZED BY COMPAL ELECTRONICS, INC. NEITHER THIS SHEET NOR THE INFORMATION IT CONTAINS MAY BE USED BY OR DISCLOSED TO ANY THIRD PARTY WITHOUT PRIOR WRITTEN CONSENT OF COMPAL ELECTRONICS, INC.				Size: Custom / Document Number: 401817 / Rev: A
				Date: Monday, September 28, 2009 / Sheet 23 of 53

CRT Connector

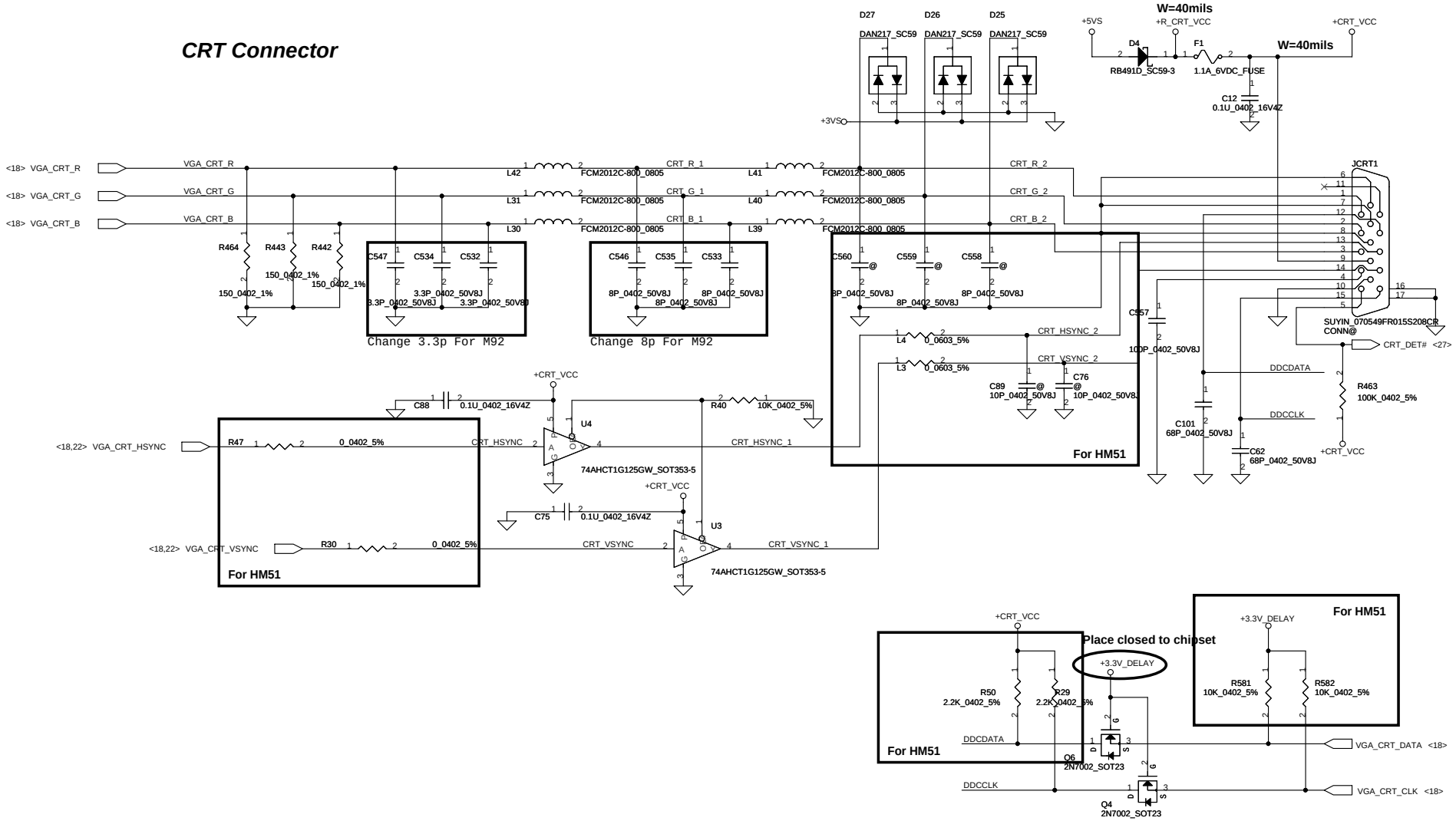

Security Classification	Compal Secret Data			Compal Electronics, Inc.
Issued Date	2009/07/01	Deciphered Date	2010/07/01	Title: SCHEMATIC,MB A4853
THIS SHEET OF ENGINEERING DRAWING IS THE PROPRIETARY PROPERTY OF COMPAL ELECTRONICS, INC. AND CONTAINS CONFIDENTIAL AND TRADE SECRET INFORMATION. THIS SHEET MAY NOT BE TRANSFERED FROM THE CUSTODY OF THE COMPETENT DIVISION OF R&D DEPARTMENT EXCEPT AS AUTHORIZED BY COMPAL ELECTRONICS, INC. NEITHER THIS SHEET NOR THE INFORMATION IT CONTAINS MAY BE USED BY OR DISCLOSED TO ANY THIRD PARTY WITHOUT PRIOR WRITTEN CONSENT OF COMPAL ELECTRONICS, INC.				Size: B; Document Number: 401817; Rev: A
				Date: Monday, September 28, 2009; Sheet 24 of 53

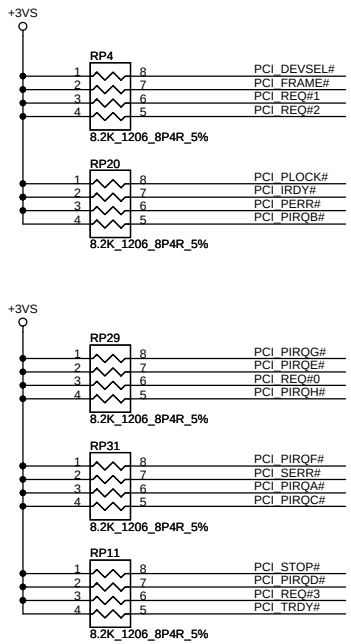

DMI for ESI-compatible operation	
PCI_GNT#1	Low= DMI for ESI-compatible operation High= Default* (Internal pull-up)

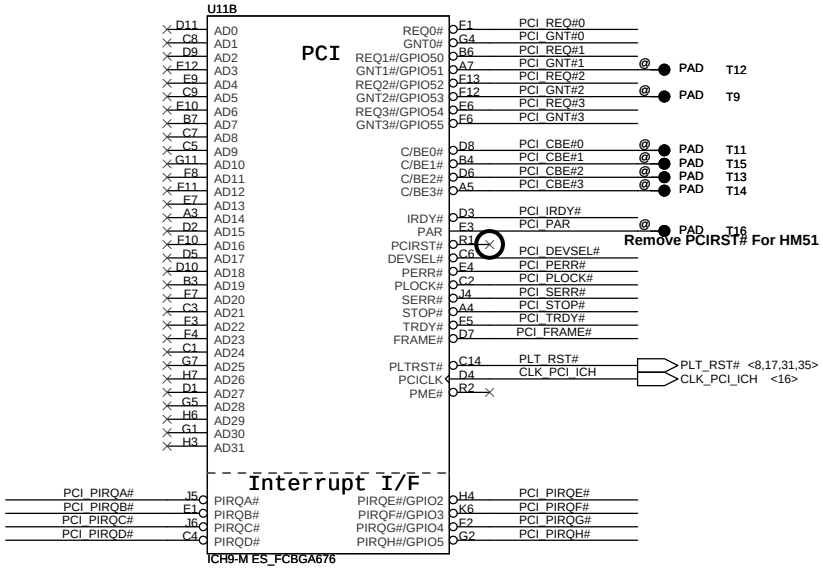

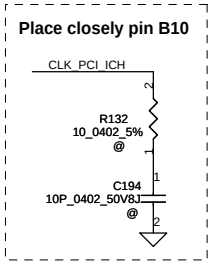

A16 Swap Override Strap	
PCI_GNT#3	Low= A16 swap override Enable High= Default*

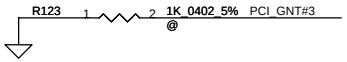

Boot BIOS Strap		
PCI_GNT#0	SPI_CS#1	Boot BIOS Loaction
0	1	SPI
1	0	PCI
1	1	LPC*

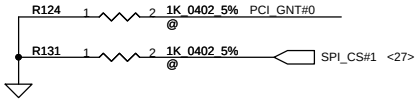

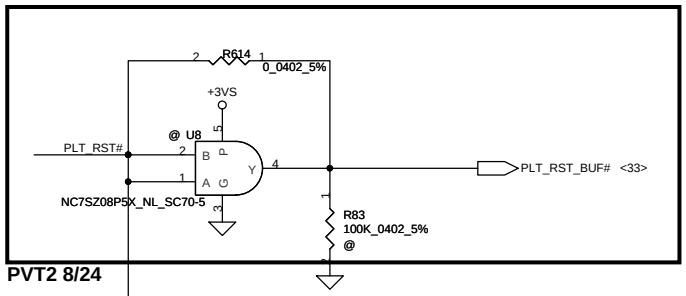

PVT2 8/24

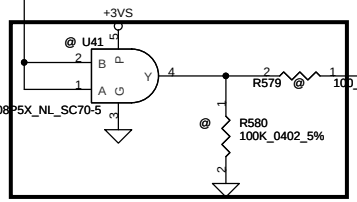

For M92

Pre-MP 9/17

Security Classification	Compal Secret Data		
Issued Date	2009/07/01	Deciphered Date	2010/07/01

THIS SHEET OF ENGINEERING DRAWING IS THE PROPRIETARY PROPERTY OF COMPAL ELECTRONICS, INC. AND CONTAINS CONFIDENTIAL AND TRADE SECRET INFORMATION. THIS SHEET MAY NOT BE TRANSFERED FROM THE CUSTODY OF THE COMPETENT DIVISION OF R&D DEPARTMENT EXCEPT AS AUTHORIZED BY COMPAL ELECTRONICS, INC. NEITHER THIS SHEET NOR THE INFORMATION IT CONTAINS MAY BE USED BY OR DISCLOSED TO ANY THIRD PARTY WITHOUT PRIOR WRITTEN CONSENT OF COMPAL ELECTRONICS, INC.

Compal Electronics, Inc.

Title: SCHEMATIC,MB A4853

Size | Document Number: 401817 | Rev: A

Date: Monday, September 28, 2009 | Sheet 25 of 53

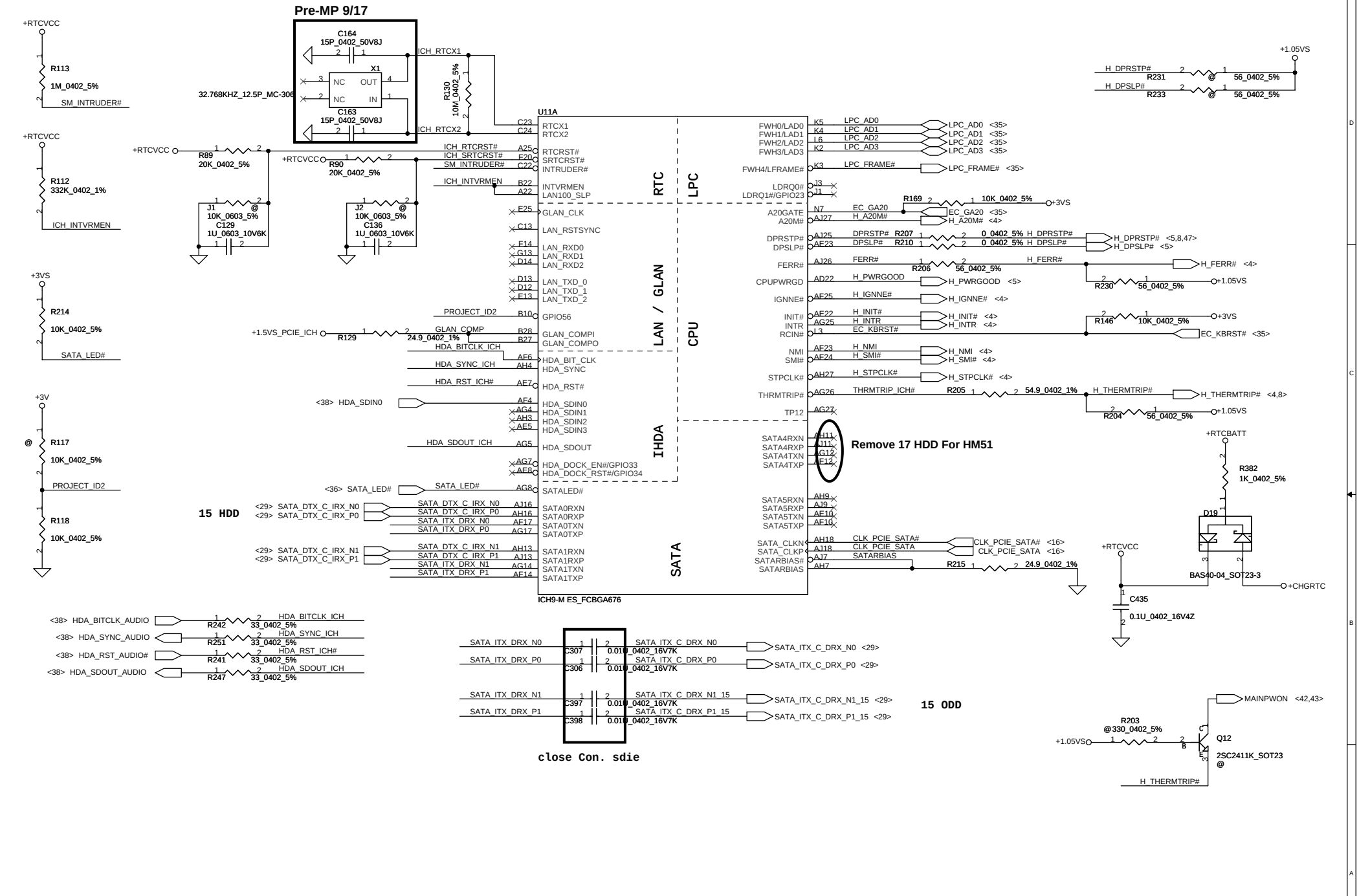

Security Classification	Compal Secret Data		
Issued Date	2009/07/01	Deciphered Date	2010/07/01

THIS SHEET OF ENGINEERING DRAWING IS THE PROPRIETARY PROPERTY OF COMPAL ELECTRONICS, INC. AND CONTAINS CONFIDENTIAL AND TRADE SECRET INFORMATION. THIS SHEET MAY NOT BE TRANSFERED FROM THE CUSTODY OF THE COMPETENT DIVISION OF R&D DEPARTMENT EXCEPT AS AUTHORIZED BY COMPAL ELECTRONICS, INC. NEITHER THIS SHEET NOR THE INFORMATION IT CONTAINS MAY BE USED BY OR DISCLOSED TO ANY THIRD PARTY WITHOUT PRIOR WRITTEN CONSENT OF COMPAL ELECTRONICS, INC.

Compal Electronics, Inc.

Title: SCHEMATIC,MB A4853

Size: Custom | Document Number: 401817 | Rev: A

Date: Monday, September 28, 2009 | Sheet 26 of 53

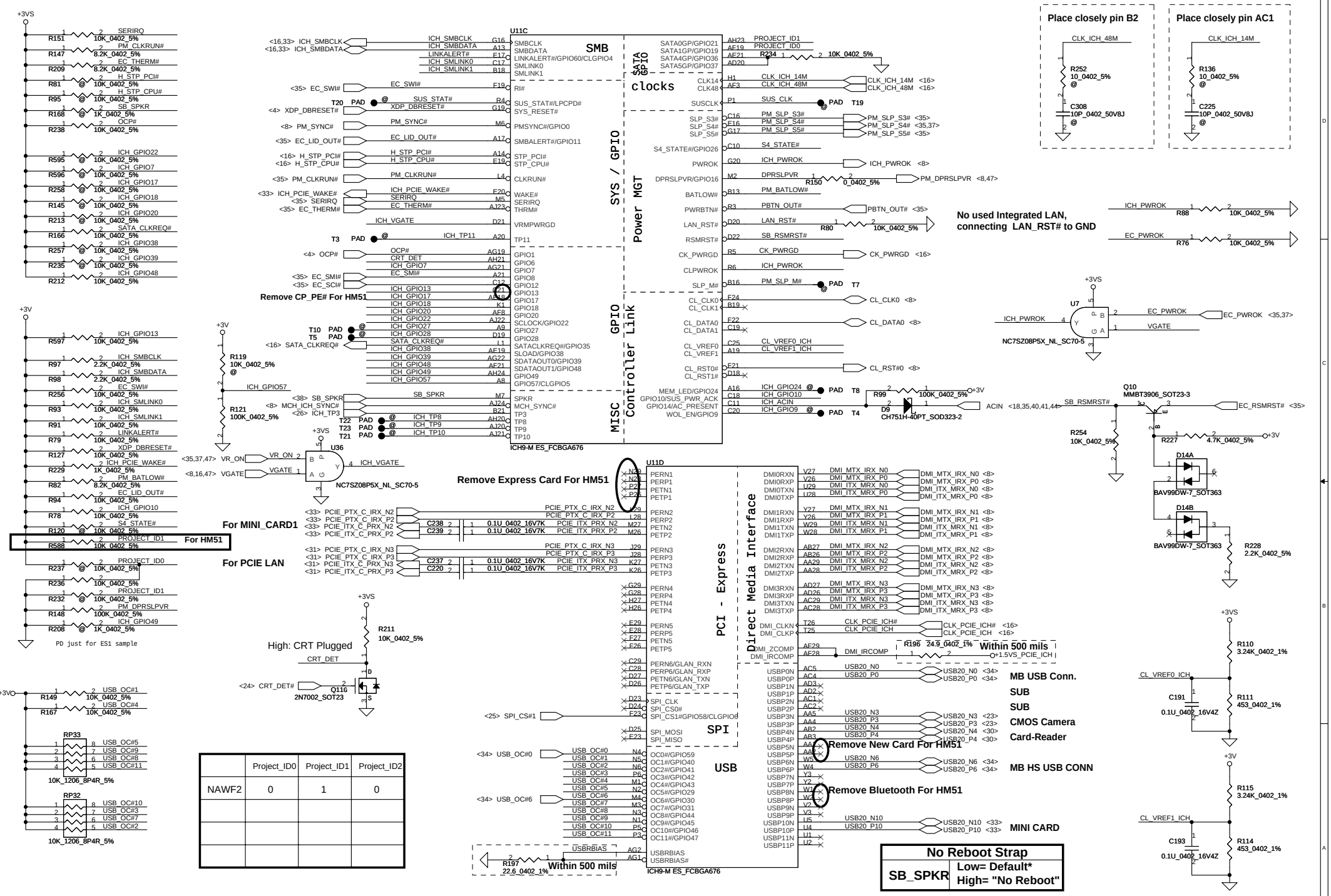

	Project_ID0	Project_ID1	Project_ID2
NAWF2	0	1	0

No Reboot Strap	
SB_SPKR	Low= Default* High= "No Reboot"

Internal TPM Strap	
SPI_MOSI	Low= Disable* High= iTPM enable by MCH strap

DMI Termination Voltage	
GPIO49	Low= Desktop used High= Mobile* (Internal pull-up)

Security Classification	Compal Secret Data		
Issued Date	2009/07/01	Deciphered Date	2010/07/01

THIS SHEET OF ENGINEERING DRAWING IS THE PROPRIETARY PROPERTY OF COMPAL ELECTRONICS, INC. AND CONTAINS CONFIDENTIAL AND TRADE SECRET INFORMATION. THIS SHEET MAY NOT BE TRANSFERRED FROM THE CUSTODY OF THE COMPETENT DIVISION OF R&D DEPARTMENT EXCEPT AS AUTHORIZED BY COMPAL ELECTRONICS, INC. NEITHER THIS SHEET NOR THE INFORMATION IT CONTAINS MAY BE USED BY OR DISCLOSED TO ANY THIRD PARTY WITHOUT PRIOR WRITTEN CONSENT OF COMPAL ELECTRONICS, INC.

Compal Electronics, Inc.

Title: SCHEMATIC,MB A4853

Size: Custom | Document Number: 401817 | Rev: A

Date: Monday, September 28, 2009 | Sheet 27 of 53

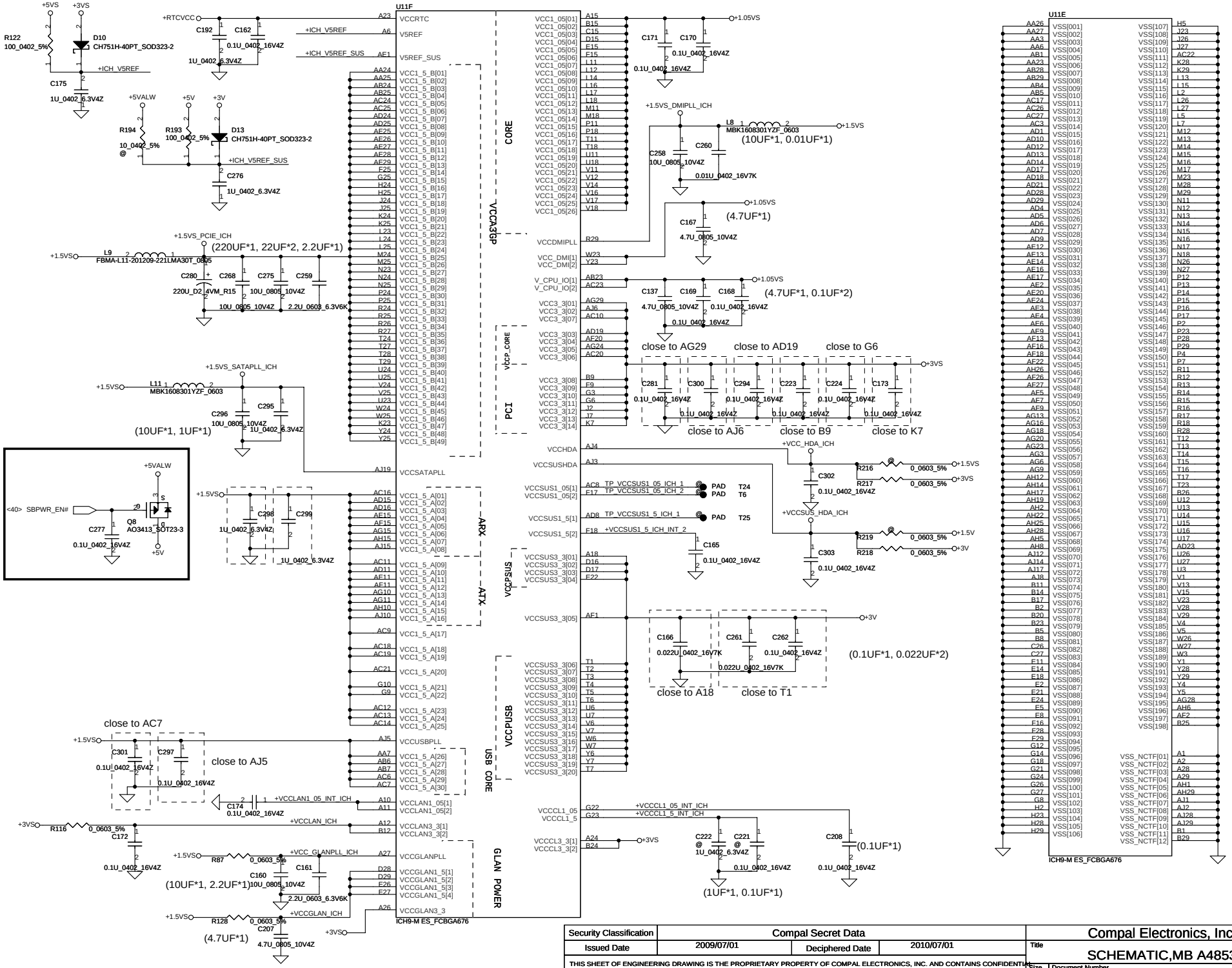

Security Classification	Compal Secret Data		
Issued Date	2009/07/01	Deciphered Date	2010/07/01

THIS SHEET OF ENGINEERING DRAWING IS THE PROPRIETARY PROPERTY OF COMPAL ELECTRONICS, INC. AND CONTAINS CONFIDENTIAL AND TRADE SECRET INFORMATION. THIS SHEET MAY NOT BE TRANSFERRED FROM THE CUSTODY OF THE COMPETENT DIVISION OF R&D DEPARTMENT EXCEPT AS AUTHORIZED BY COMPAL ELECTRONICS, INC. NEITHER THIS SHEET NOR THE INFORMATION IT CONTAINS MAY BE USED BY OR DISCLOSED TO ANY THIRD PARTY WITHOUT PRIOR WRITTEN CONSENT OF COMPAL ELECTRONICS, INC.

Compal Electronics, Inc.

Title: SCHEMATIC,MB A4853

Size: Custom | Document Number: 401817 | Rev: A

Date: Monday, September 28, 2009 | Sheet 28 of 53

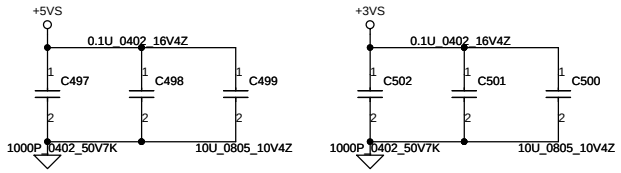

SATA HDD Conn.

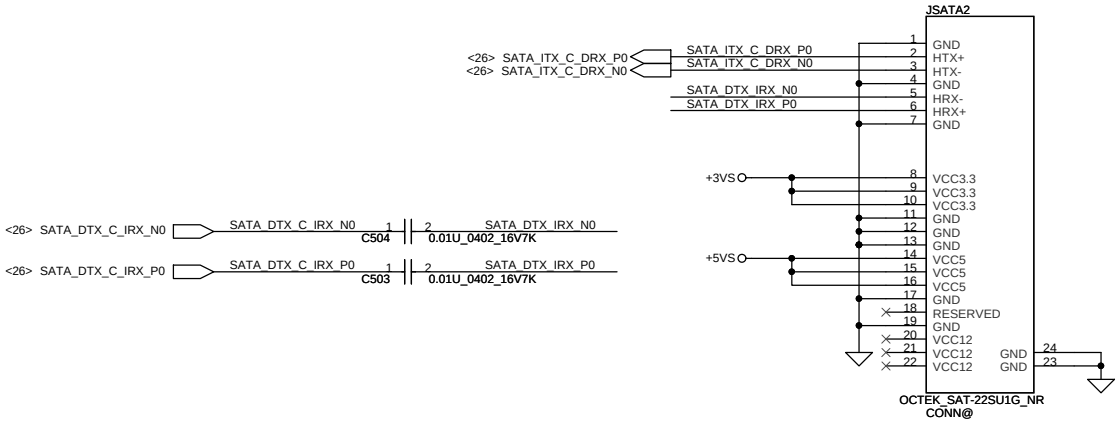

SATA ODD Conn.

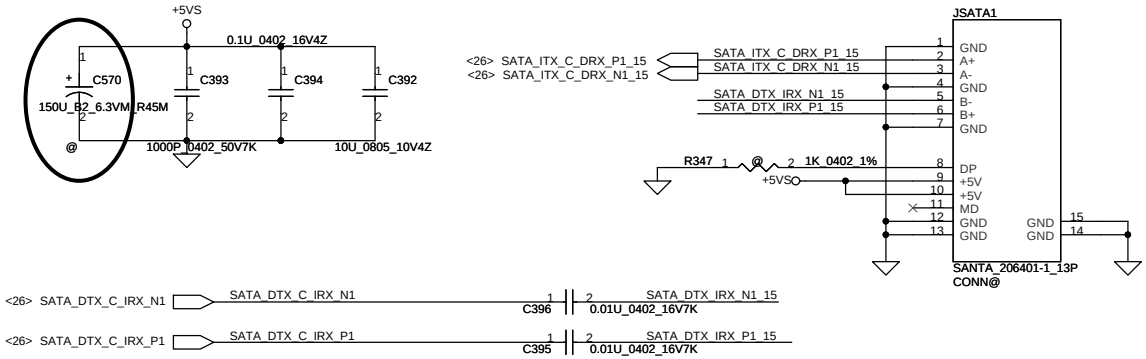

Security Classification	Compal Secret Data			Compal Electronics, Inc.
Issued Date	2009/07/01	Deciphered Date	2010/07/01	Title: SCHEMATIC,MB A4853
THIS SHEET OF ENGINEERING DRAWING IS THE PROPRIETARY PROPERTY OF COMPAL ELECTRONICS, INC. AND CONTAINS CONFIDENTIAL AND TRADE SECRET INFORMATION. THIS SHEET MAY NOT BE TRANSFERED FROM THE CUSTODY OF THE COMPETENT DIVISION OF R&D DEPARTMENT EXCEPT AS AUTHORIZED BY COMPAL ELECTRONICS, INC. NEITHER THIS SHEET NOR THE INFORMATION IT CONTAINS MAY BE USED BY OR DISCLOSED TO ANY THIRD PARTY WITHOUT PRIOR WRITTEN CONSENT OF COMPAL ELECTRONICS, INC.				Size: Custom / Document Number: 401817 / Rev: A
				Date: Monday, September 28, 2009 / Sheet 29 of 53

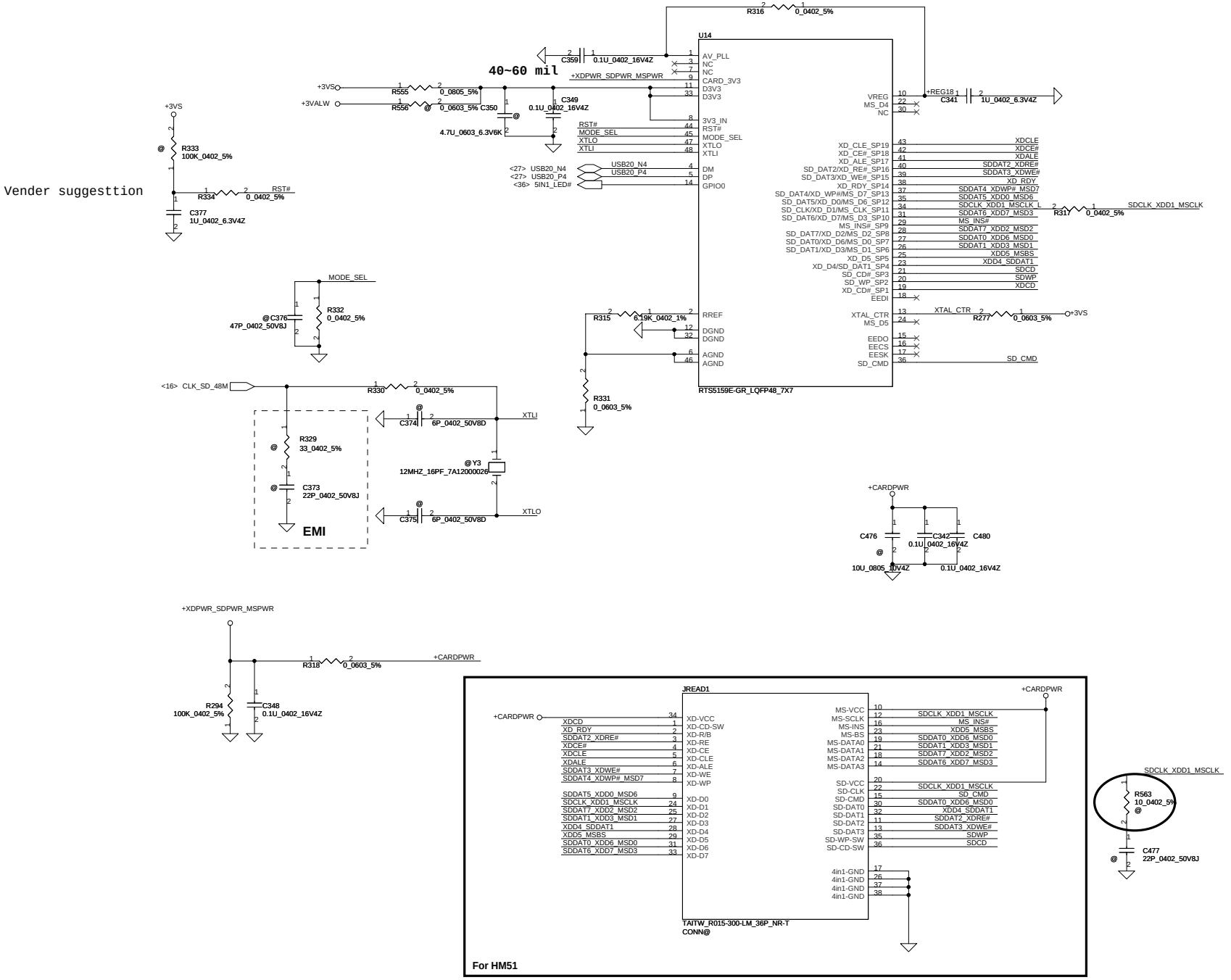

Security Classification	Compal Secret Data		
Issued Date	2009/07/01	Deciphered Date	2010/07/01

THIS SHEET OF ENGINEERING DRAWING IS THE PROPRIETARY PROPERTY OF COMPAL ELECTRONICS, INC. AND CONTAINS CONFIDENTIAL AND TRADE SECRET INFORMATION. THIS SHEET MAY NOT BE TRANSFERED FROM THE CUSTODY OF THE COMPETENT DIVISION OF R&D DEPARTMENT EXCEPT AS AUTHORIZED BY COMPAL ELECTRONICS, INC. NEITHER THIS SHEET NOR THE INFORMATION IT CONTAINS MAY BE USED BY OR DISCLOSED TO ANY THIRD PARTY WITHOUT PRIOR WRITTEN CONSENT OF COMPAL ELECTRONICS, INC.

Compal Electronics, Inc.

Title: SCHEMATIC,MB A4853

Size: Custom | Document Number: 401817 | Rev: A

Date: Monday, September 28, 2009 | Sheet 30 of 53

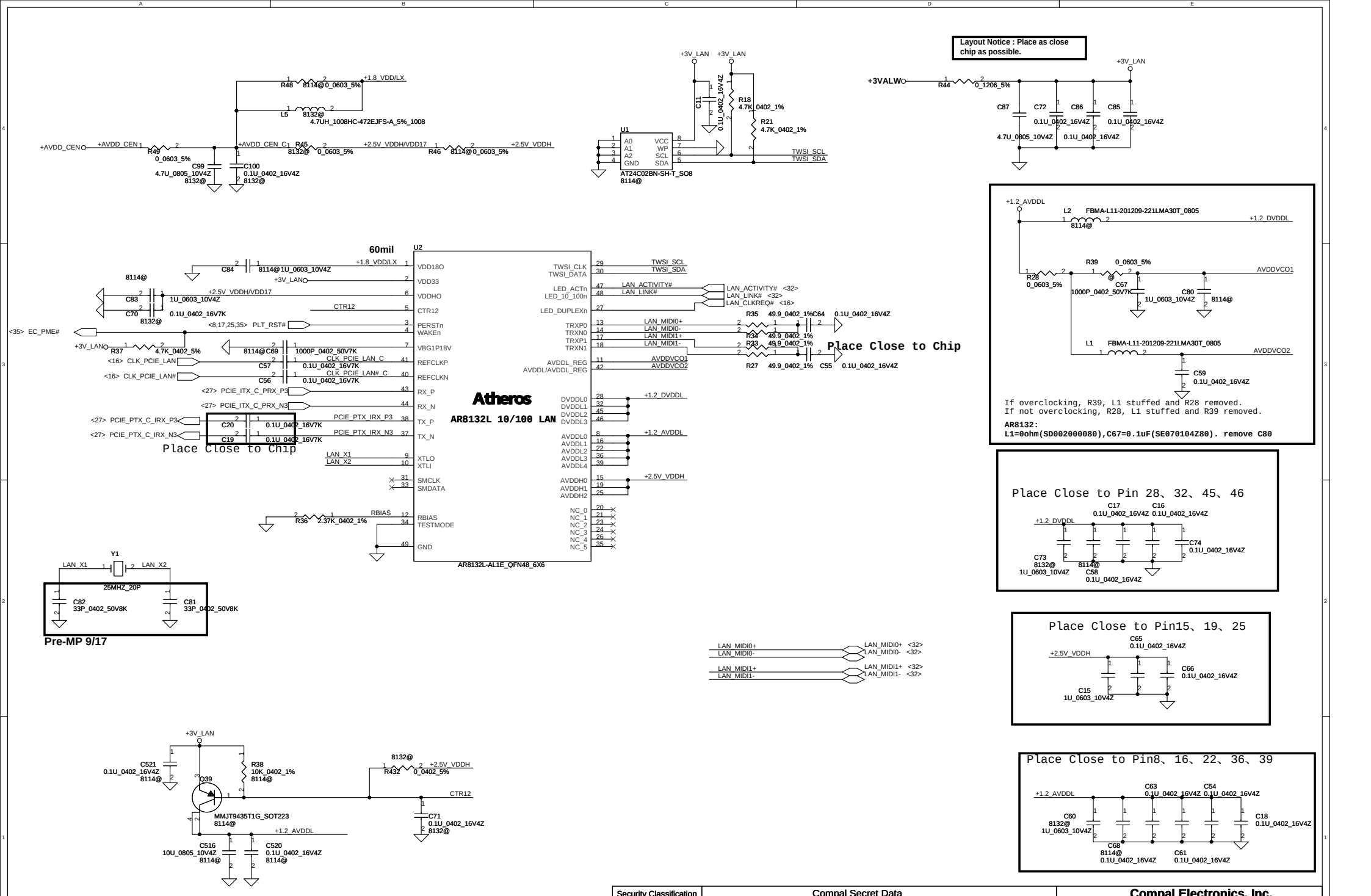

Security Classification	Compal Secret Data			Compal Electronics, Inc.
Issued Date	2009/07/01	Deciphered Date	2010/07/01	Title: SCHEMATIC,MB A4853
				Size: Custom; Document Number: 401817; Rev: A
				Date: Monday, September 28, 2009; Sheet 31 of 53

THIS SHEET OF ENGINEERING DRAWING IS THE PROPRIETARY PROPERTY OF COMPAL ELECTRONICS, INC. AND CONTAINS CONFIDENTIAL AND TRADE SECRET INFORMATION. THIS SHEET MAY NOT BE TRANSFERED FROM THE CUSTODY OF THE COMPETENT DIVISION OF R&D DEPARTMENT EXCEPT AS AUTHORIZED BY COMPAL ELECTRONICS, INC. NEITHER THIS SHEET NOR THE INFORMATION IT CONTAINS MAY BE USED BY OR DISCLOSED TO ANY THIRD PARTY WITHOUT PRIOR WRITTEN CONSENT OF COMPAL ELECTRONICS, INC.

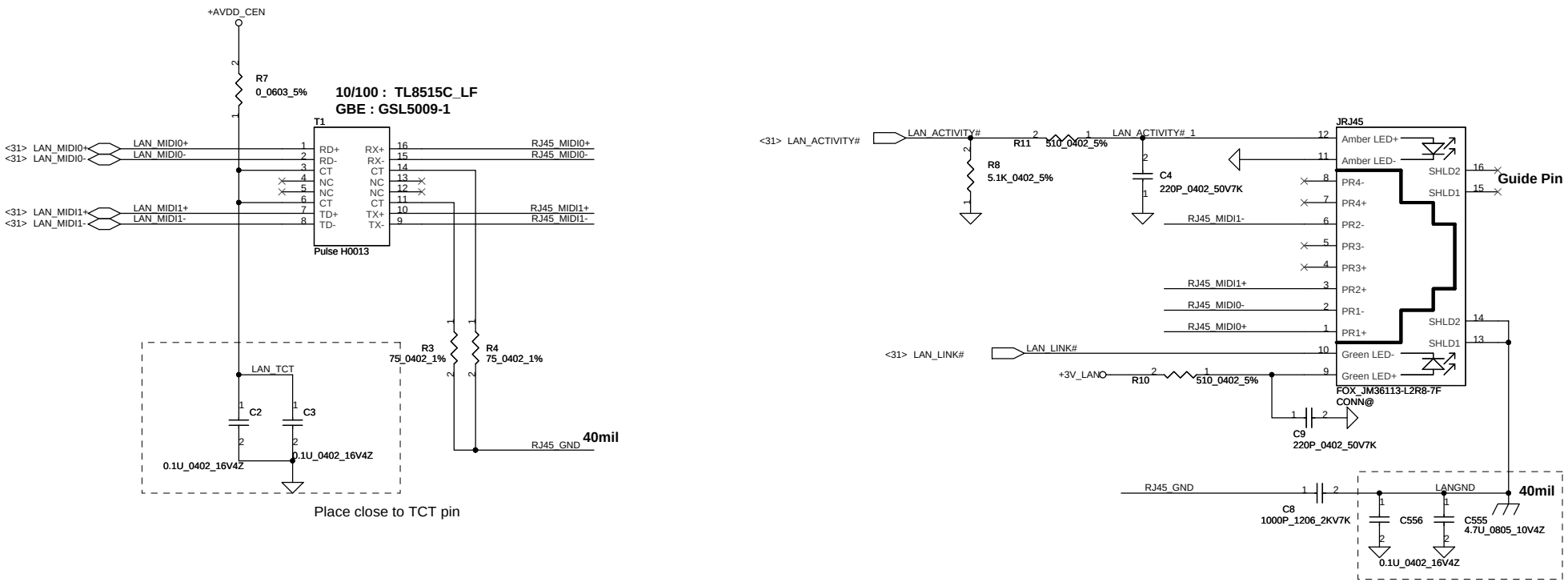

Security Classification	Compal Secret Data			Compal Electronics, Inc.
Issued Date	2009/07/01	Deciphered Date	2010/07/01	Title: SCHEMATIC,MB A4853
				Size: B — Document Number: 401817 — Rev: A
				Date: Monday, September 28, 2009 — Sheet 32 of 53

THIS SHEET OF ENGINEERING DRAWING IS THE PROPRIETARY PROPERTY OF COMPAL ELECTRONICS, INC. AND CONTAINS CONFIDENTIAL AND TRADE SECRET INFORMATION. THIS SHEET MAY NOT BE TRANSFERED FROM THE CUSTODY OF THE COMPETENT DIVISION OF R&D DEPARTMENT EXCEPT AS AUTHORIZED BY COMPAL ELECTRONICS, INC. NEITHER THIS SHEET NOR THE INFORMATION IT CONTAINS MAY BE USED BY OR DISCLOSED TO ANY THIRD PARTY WITHOUT PRIOR WRITTEN CONSENT OF COMPAL ELECTRONICS, INC.

For Wireless LAN

Mini Card Power Rating			
Power	Primary Power (mA)		Auxiliary Power (mA)
	Peak	Normal	Normal
+3VS	1000	750	
+3V	330	250	250 (wake enable)
+1.5VS	500	375	5 (Not wake enable)

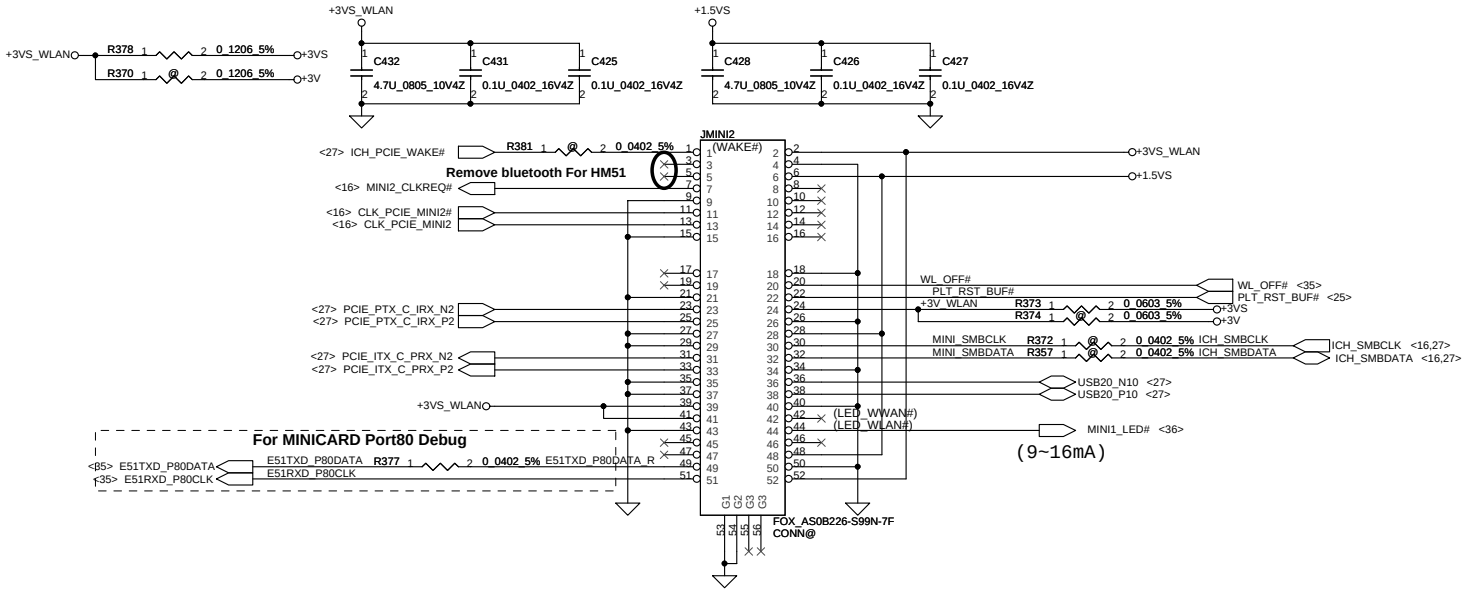

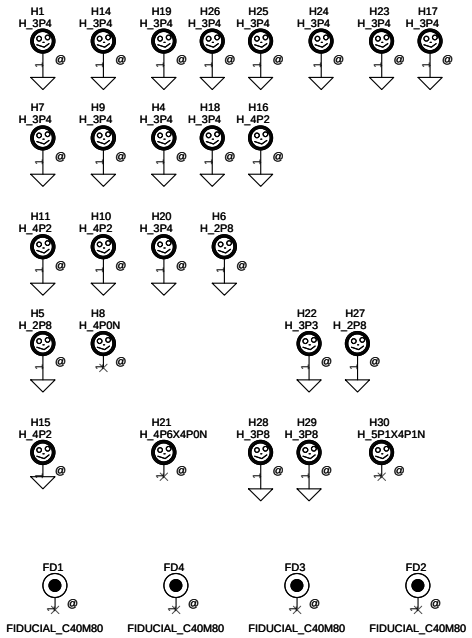

Security Classification	Compal Secret Data			Compal Electronics, Inc.
Issued Date	2009/07/01	Deciphered Date	2010/07/01	Title: SCHEMATIC,MB A4853
THIS SHEET OF ENGINEERING DRAWING IS THE PROPRIETARY PROPERTY OF COMPAL ELECTRONICS, INC. AND CONTAINS CONFIDENTIAL AND TRADE SECRET INFORMATION. THIS SHEET MAY NOT BE TRANSFERED FROM THE CUSTODY OF THE COMPETENT DIVISION OF R&D DEPARTMENT EXCEPT AS AUTHORIZED BY COMPAL ELECTRONICS, INC. NEITHER THIS SHEET NOR THE INFORMATION IT CONTAINS MAY BE USED BY OR DISCLOSED TO ANY THIRD PARTY WITHOUT PRIOR WRITTEN CONSENT OF COMPAL ELECTRONICS, INC.				Size: B / Document Number: 401817 / Rev: A
				Date: Monday, September 28, 2009 / Sheet 33 of 53

USB CONN.

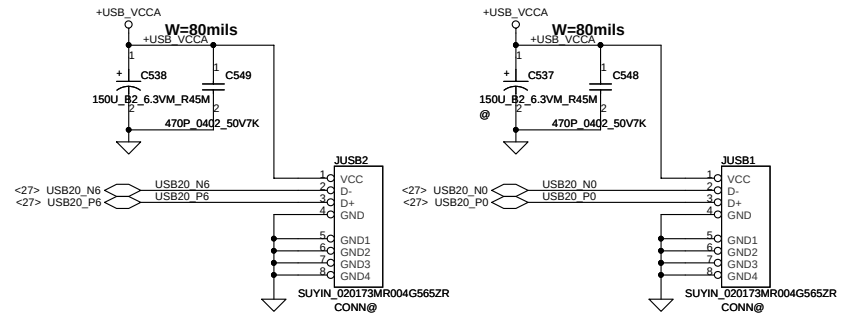

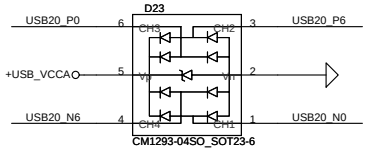

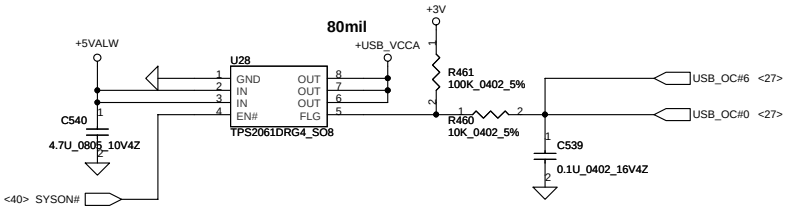

Security Classification	Compal Secret Data		Compal Electronics, Inc.
Issued Date	2009/07/01	Deciphered Date 2010/07/01	Title SCHEMATIC,MB A4853
THIS SHEET OF ENGINEERING DRAWING IS THE PROPRIETARY PROPERTY OF COMPAL ELECTRONICS, INC. AND CONTAINS CONFIDENTIAL AND TRADE SECRET INFORMATION. THIS SHEET MAY NOT BE TRANSFERED FROM THE CUSTODY OF THE COMPETENT DIVISION OF R&D DEPARTMENT EXCEPT AS AUTHORIZED BY COMPAL ELECTRONICS, INC. NEITHER THIS SHEET NOR THE INFORMATION IT CONTAINS MAY BE USED BY OR DISCLOSED TO ANY THIRD PARTY WITHOUT PRIOR WRITTEN CONSENT OF COMPAL ELECTRONICS, INC.			Size B / Document Number 401817 / Rev A
			Date: Monday, September 28, 2009 / Sheet 34 of 53

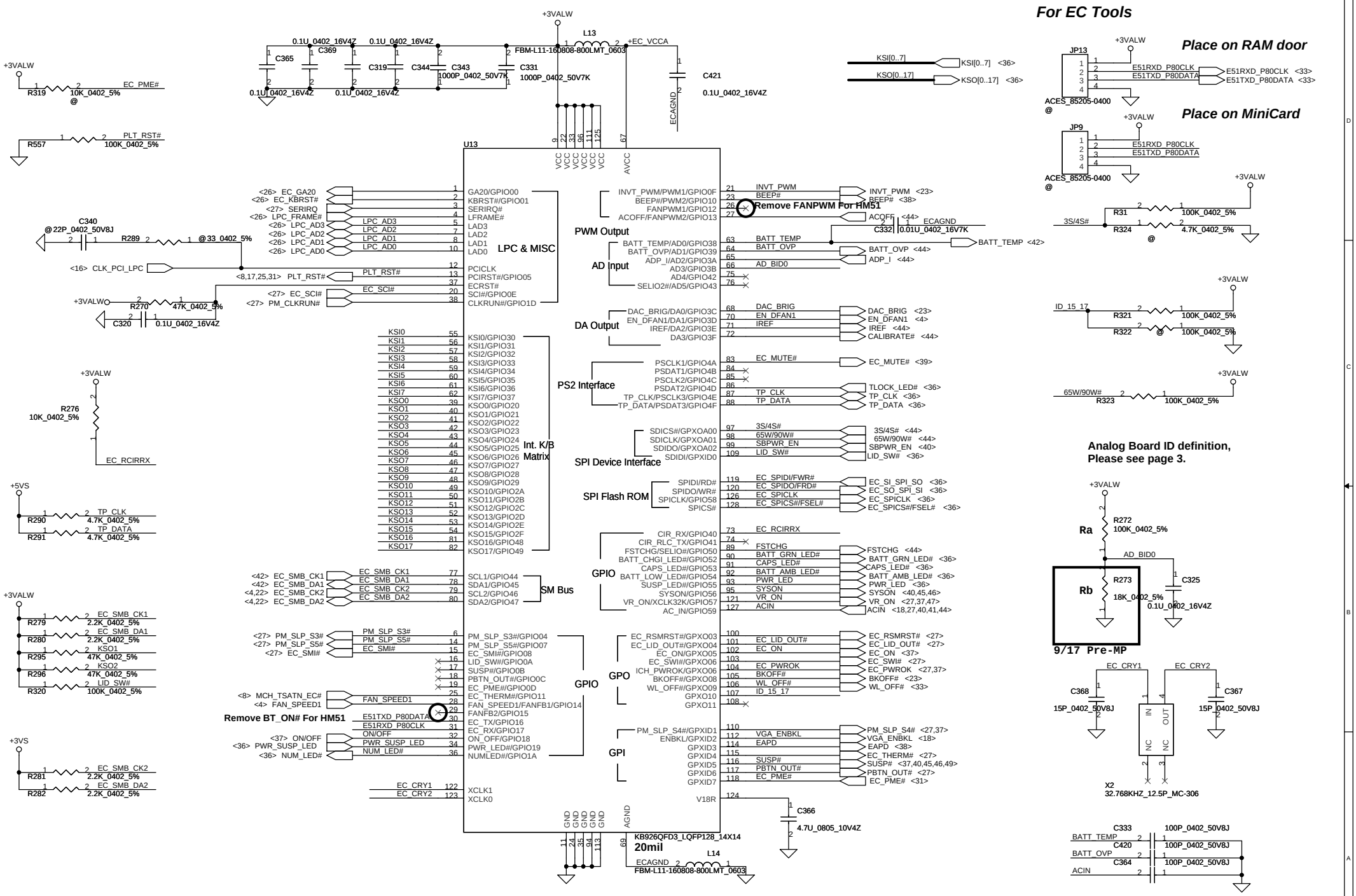

Security Classification	Compal Secret Data		
Issued Date	2009/07/01	Deciphered Date	2010/07/01

THIS SHEET OF ENGINEERING DRAWING IS THE PROPRIETARY PROPERTY OF COMPAL ELECTRONICS, INC. AND CONTAINS CONFIDENTIAL AND TRADE SECRET INFORMATION. THIS SHEET MAY NOT BE TRANSFERED FROM THE CUSTODY OF THE COMPETENT DIVISION OF R&D DEPARTMENT EXCEPT AS AUTHORIZED BY COMPAL ELECTRONICS, INC. NEITHER THIS SHEET NOR THE INFORMATION IT CONTAINS MAY BE USED BY OR DISCLOSED TO ANY THIRD PARTY WITHOUT PRIOR WRITTEN CONSENT OF COMPAL ELECTRONICS, INC.

Compal Electronics, Inc.

Title: SCHEMATIC,MB A4853

Size: B | Document Number: 401817 | Rev: A

Date: Monday, September 28, 2009 | Sheet 35 of 53

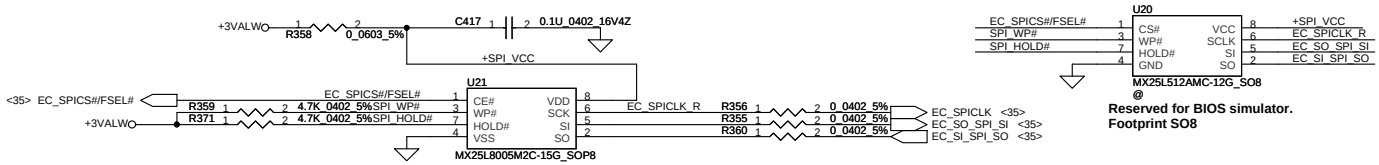

ENE suggestion SPI Frequency over 66MHz
SST: 50MHz
MXIC: 70MHz
ST: 40MHz

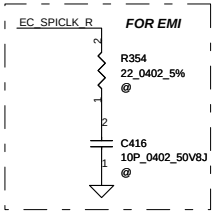

To TP/B Conn.

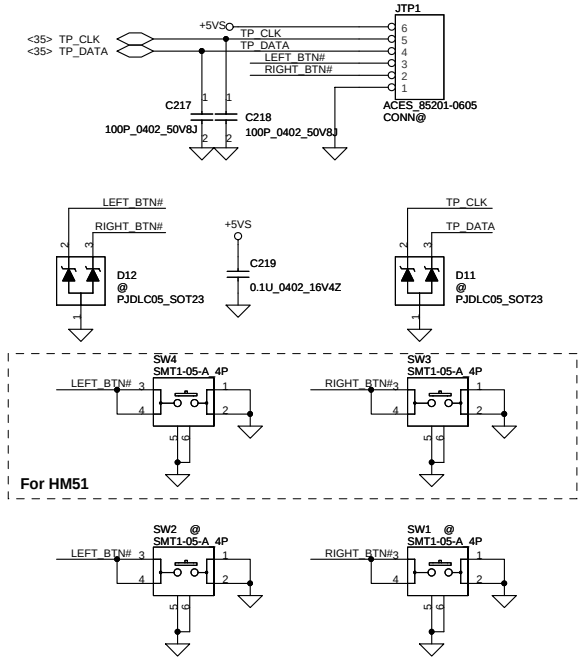

INT_KBD Conn.

To POWER/B

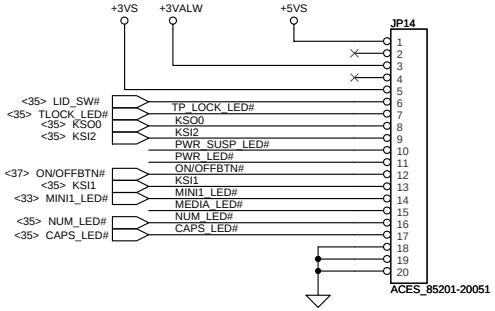

	KSO0
KSI1	WL_BTN#
KSI2	TLOCK_BTN#
KSI3	
KSI4	
KSI5	

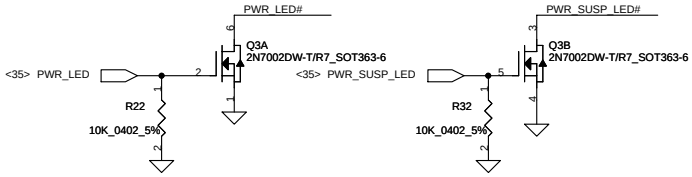

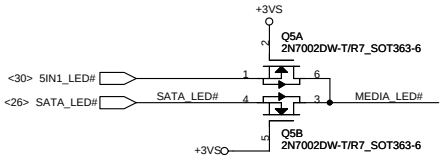

FOR EMI

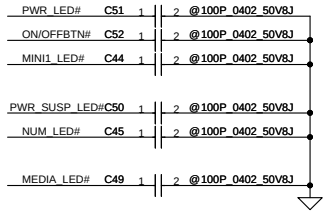

Compal Footprint

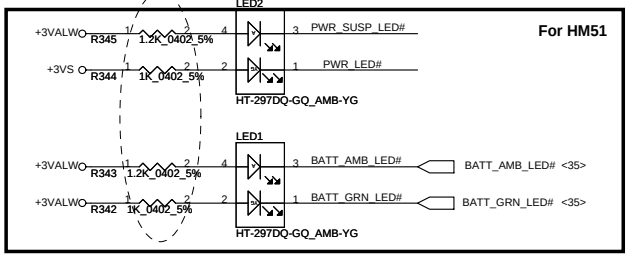

Security Classification	Compal Secret Data			Compal Electronics, Inc.
Issued Date	2009/07/01	Deciphered Date	2010/07/01	Title: SCHEMATIC,MB A4853

THIS SHEET OF ENGINEERING DRAWING IS THE PROPRIETARY PROPERTY OF COMPAL ELECTRONICS, INC. AND CONTAINS CONFIDENTIAL AND TRADE SECRET INFORMATION. THIS SHEET MAY NOT BE TRANSFERED FROM THE CUSTODY OF THE COMPETENT DIVISION OF R&D DEPARTMENT EXCEPT AS AUTHORIZED BY COMPAL ELECTRONICS, INC. NEITHER THIS SHEET NOR THE INFORMATION IT CONTAINS MAY BE USED BY OR DISCLOSED TO ANY THIRD PARTY WITHOUT PRIOR WRITTEN CONSENT OF COMPAL ELECTRONICS, INC.

Size	Document Number	Rev
B	401817	A

Date: Monday, September 28, 2009 Sheet 36 of 53

Power Button

ON/OFF switch

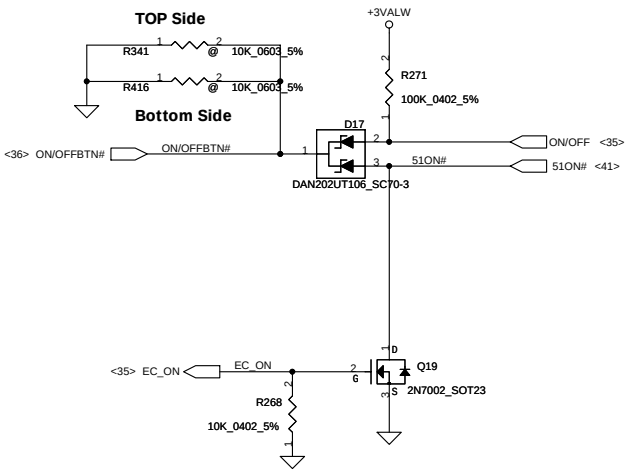

DDR3

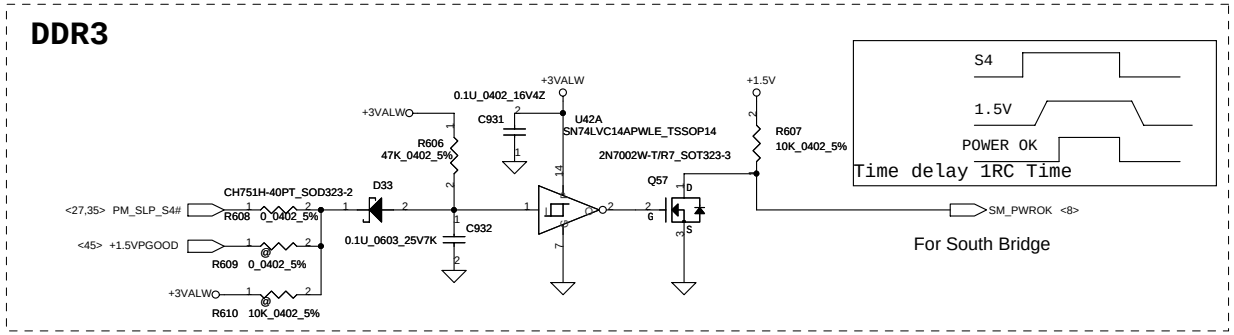

Power ON Circuit

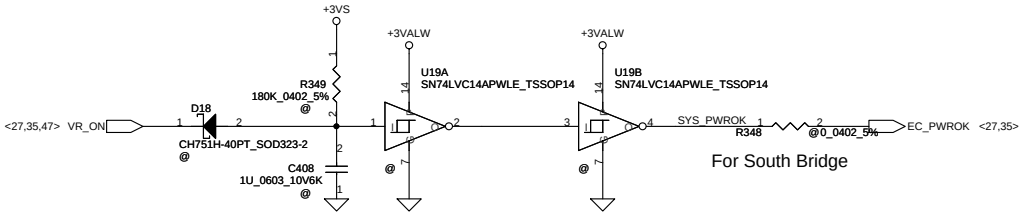

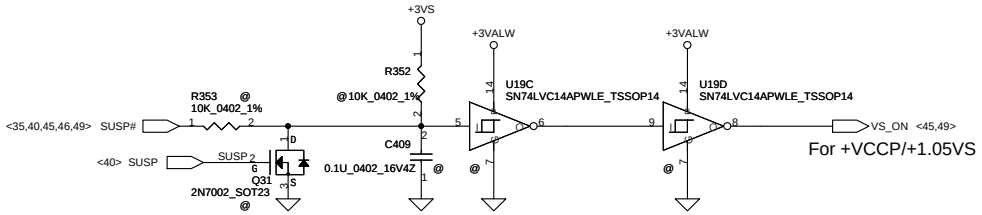

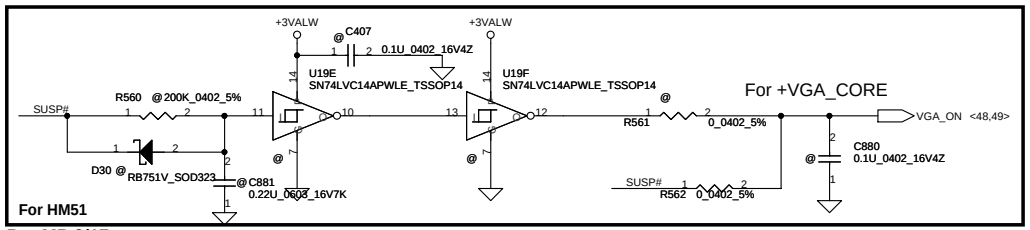

Pre-MP 9/17

Security Classification	Compal Secret Data			Compal Electronics, Inc.
Issued Date	2009/07/01	Deciphered Date	2010/07/01	Title: SCHEMATIC,MB A4853
THIS SHEET OF ENGINEERING DRAWING IS THE PROPRIETARY PROPERTY OF COMPAL ELECTRONICS, INC. AND CONTAINS CONFIDENTIAL AND TRADE SECRET INFORMATION. THIS SHEET MAY NOT BE TRANSFERED FROM THE CUSTODY OF THE COMPETENT DIVISION OF R&D DEPARTMENT EXCEPT AS AUTHORIZED BY COMPAL ELECTRONICS, INC. NEITHER THIS SHEET NOR THE INFORMATION IT CONTAINS MAY BE USED BY OR DISCLOSED TO ANY THIRD PARTY WITHOUT PRIOR WRITTEN CONSENT OF COMPAL ELECTRONICS, INC.				Size: B / Document Number: 401817 / Rev: A
				Date: Monday, September 28, 2009 / Sheet 37 of 53

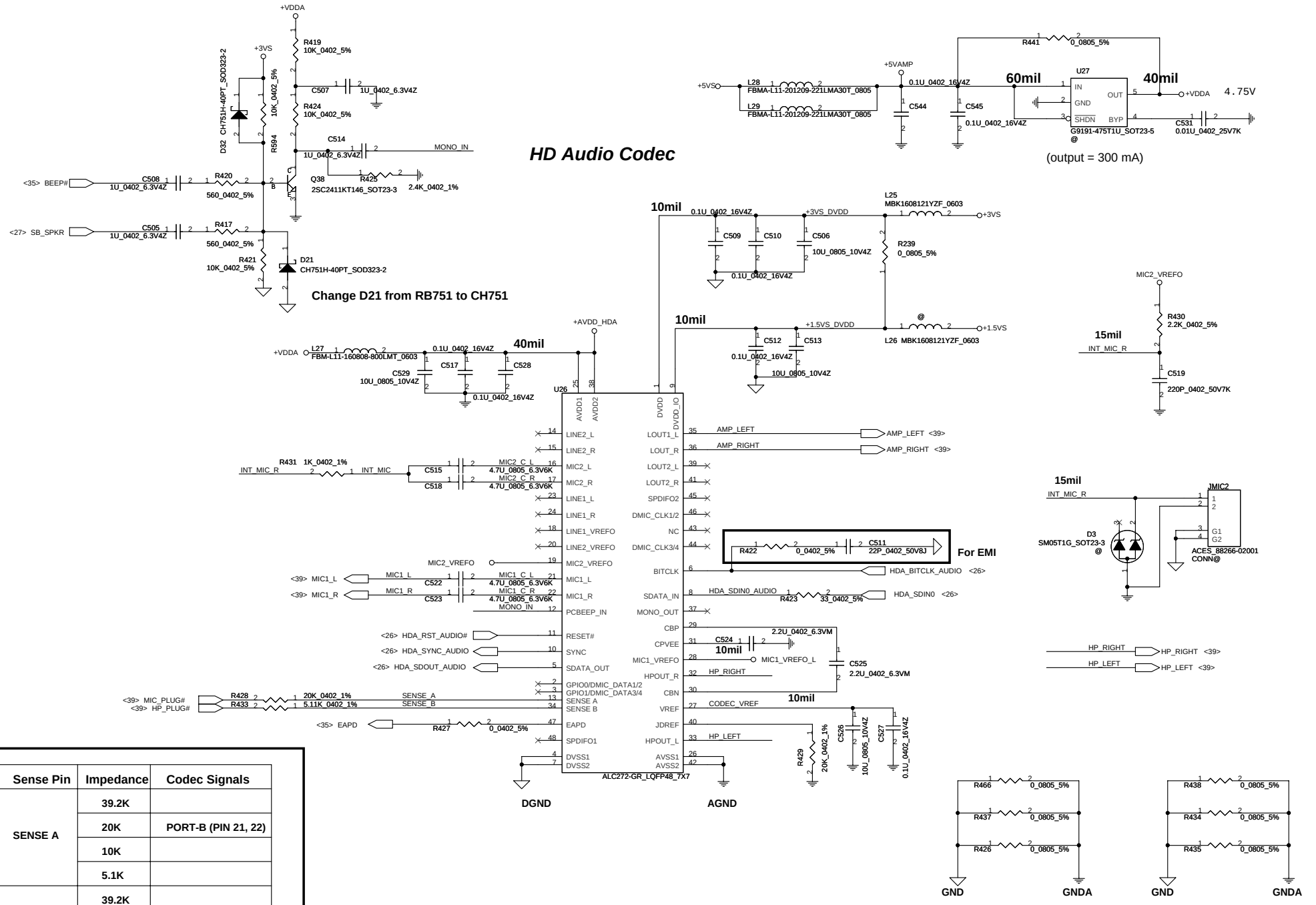

Sense Pin	Impedance	Codec Signals
SENSE A	39.2K	
	20K	PORT-B (PIN 21, 22)
	10K	
	5.1K	
SENSE B	39.2K	
	20K	
	10K	
	5.1K	PORT-H (PIN 32,33)

Security Classification	Compal Secret Data		
Issued Date	2009/07/01	Deciphered Date	2010/07/01

THIS SHEET OF ENGINEERING DRAWING IS THE PROPRIETARY PROPERTY OF COMPAL ELECTRONICS, INC. AND CONTAINS CONFIDENTIAL AND TRADE SECRET INFORMATION. THIS SHEET MAY NOT BE TRANSFERED FROM THE CUSTODY OF THE COMPETENT DIVISION OF R&D DEPARTMENT EXCEPT AS AUTHORIZED BY COMPAL ELECTRONICS, INC. NEITHER THIS SHEET NOR THE INFORMATION IT CONTAINS MAY BE USED BY OR DISCLOSED TO ANY THIRD PARTY WITHOUT PRIOR WRITTEN CONSENT OF COMPAL ELECTRONICS, INC.

Compal Electronics, Inc.

Title: SCHEMATIC,MB A4853

Size: B | Document Number: 401817 | Rev: A

Date: Monday, September 28, 2009 | Sheet 38 of 53

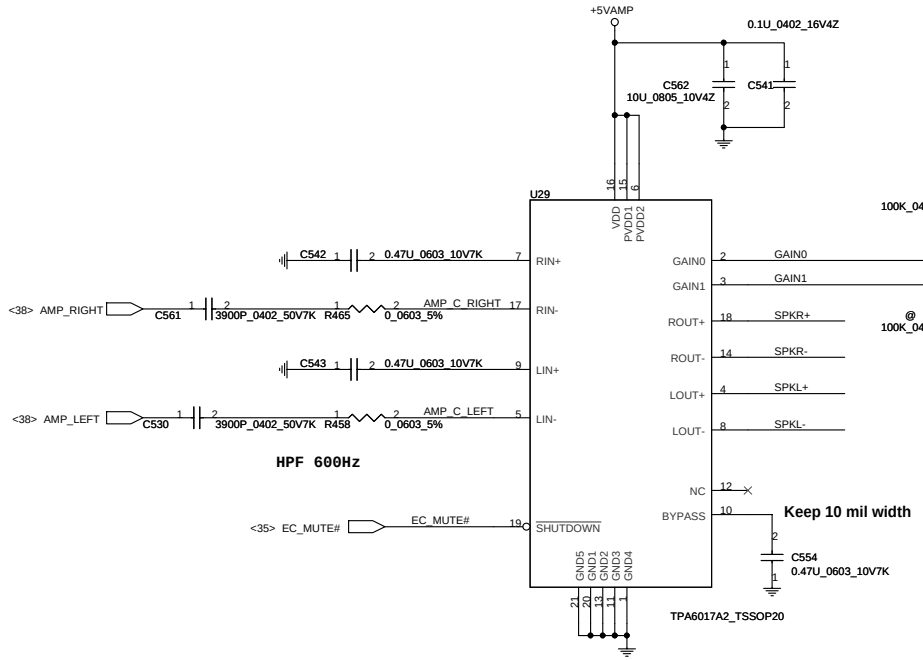

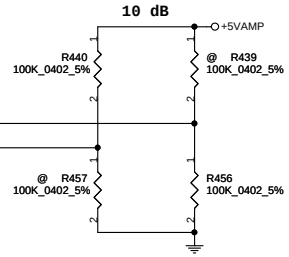

Int. Speaker Conn.

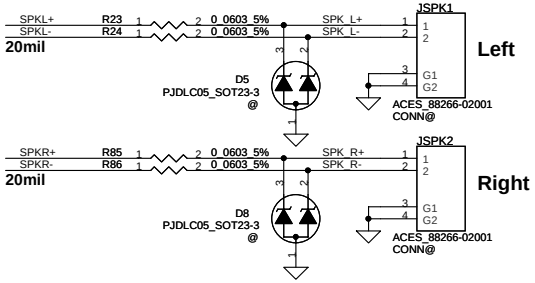

LINE Out/Headphone Out

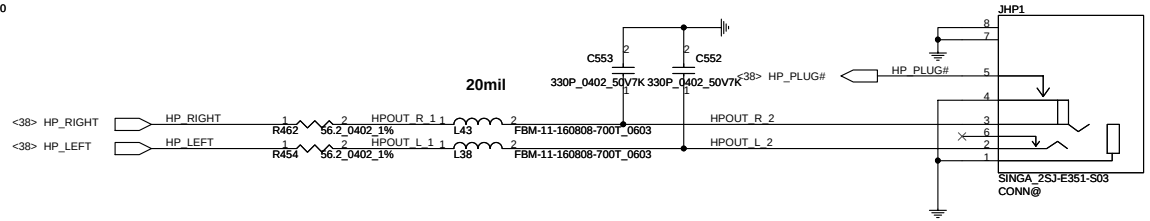

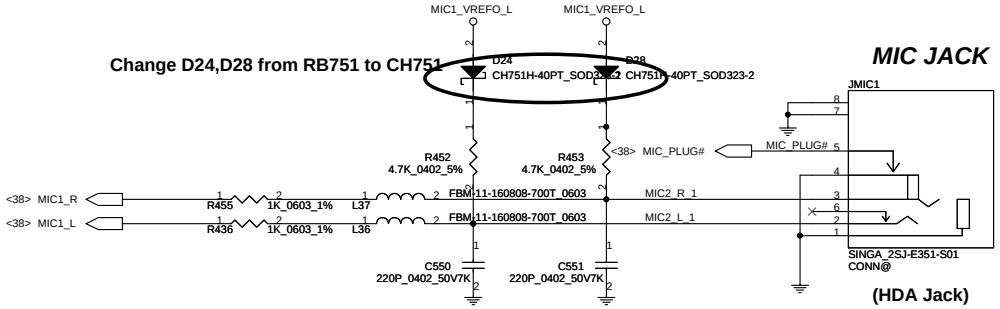

Security Classification	Compal Secret Data			Compal Electronics, Inc.
Issued Date	2009/07/01	Deciphered Date	2010/07/01	Title: SCHEMATIC,MB A4853
THIS SHEET OF ENGINEERING DRAWING IS THE PROPRIETARY PROPERTY OF COMPAL ELECTRONICS, INC. AND CONTAINS CONFIDENTIAL AND TRADE SECRET INFORMATION. THIS SHEET MAY NOT BE TRANSFERED FROM THE CUSTODY OF THE COMPETENT DIVISION OF R&D DEPARTMENT EXCEPT AS AUTHORIZED BY COMPAL ELECTRONICS, INC. NEITHER THIS SHEET NOR THE INFORMATION IT CONTAINS MAY BE USED BY OR DISCLOSED TO ANY THIRD PARTY WITHOUT PRIOR WRITTEN CONSENT OF COMPAL ELECTRONICS, INC.				Size: B / Document Number: 401817 / Rev: A
				Date: Monday, September 28, 2009 / Sheet 39 of 53

+5VALW TO +5VS

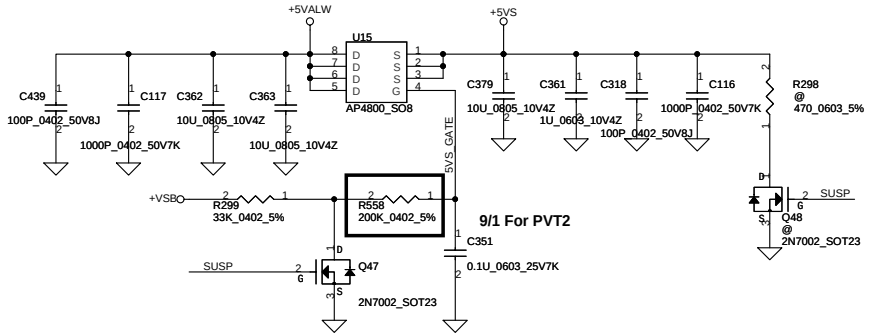

+3VALW TO +3V_SB(ICH8M AUX Power)

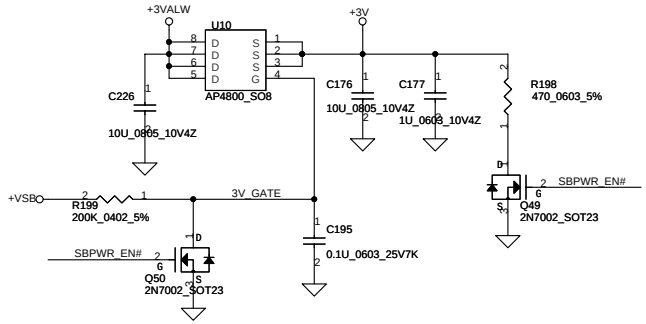

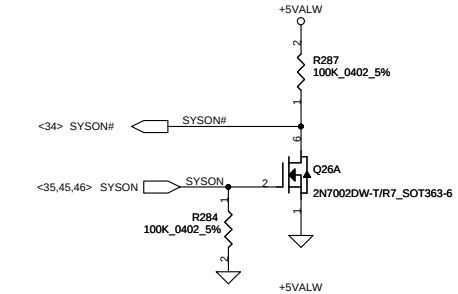

+3VALW TO +3VS

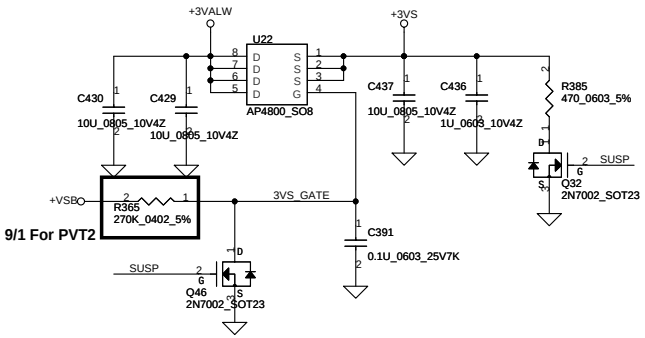

+1.5V to +1.5VS

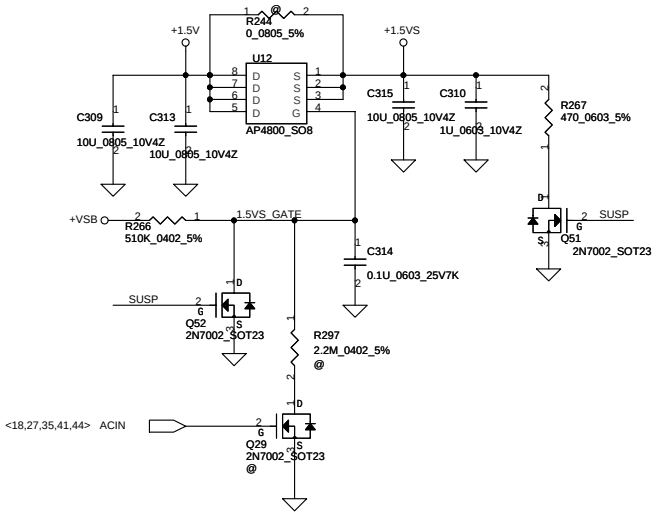

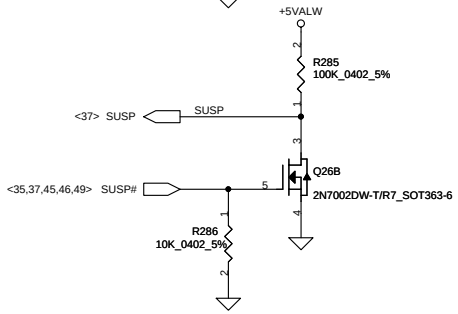

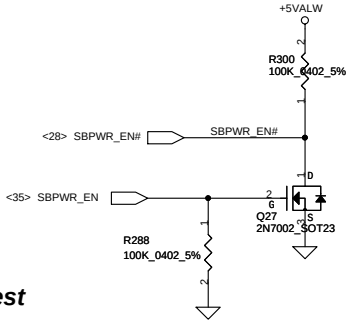

+1.8V to +1.8VS

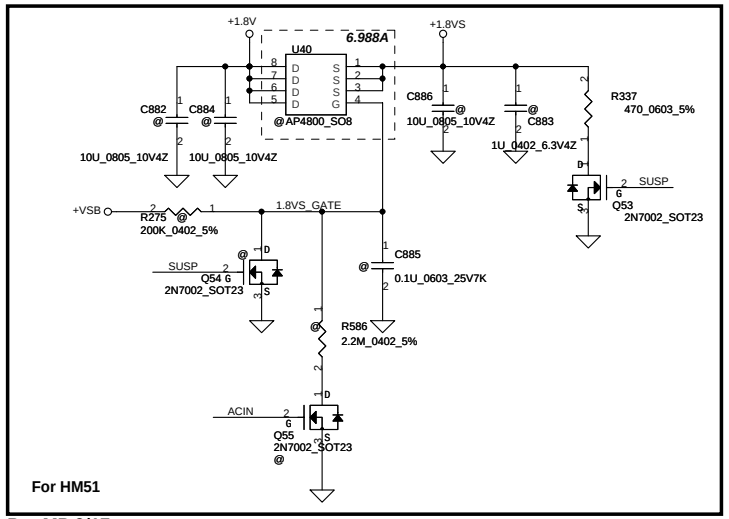

Pre-MP 9/17

Reserve for EMI request

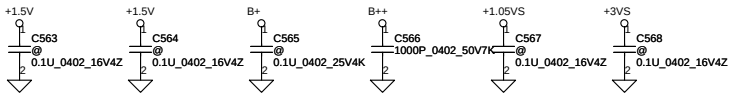

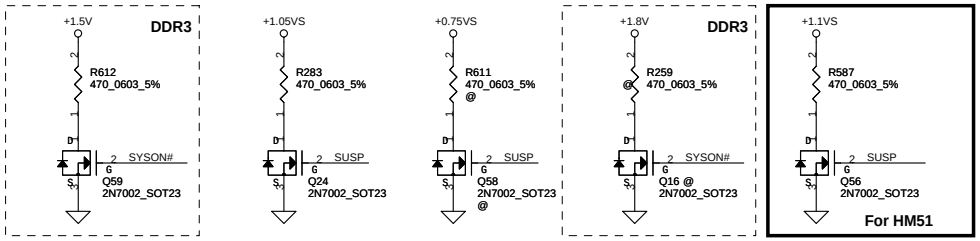

Security Classification	Compal Secret Data			Compal Electronics, Inc.
Issued Date	2009/07/01	Deciphered Date	2010/07/01	Title: SCHEMATIC,MB A4853
THIS SHEET OF ENGINEERING DRAWING IS THE PROPRIETARY PROPERTY OF COMPAL ELECTRONICS, INC. AND CONTAINS CONFIDENTIAL AND TRADE SECRET INFORMATION. THIS SHEET MAY NOT BE TRANSFERED FROM THE CUSTODY OF THE COMPETENT DIVISION OF R&D DEPARTMENT EXCEPT AS AUTHORIZED BY COMPAL ELECTRONICS, INC. NEITHER THIS SHEET NOR THE INFORMATION IT CONTAINS MAY BE USED BY OR DISCLOSED TO ANY THIRD PARTY WITHOUT PRIOR WRITTEN CONSENT OF COMPAL ELECTRONICS, INC.				Size: B; Document Number: 401817; Rev: A
				Date: Monday, September 28, 2009; Sheet 40 of 53

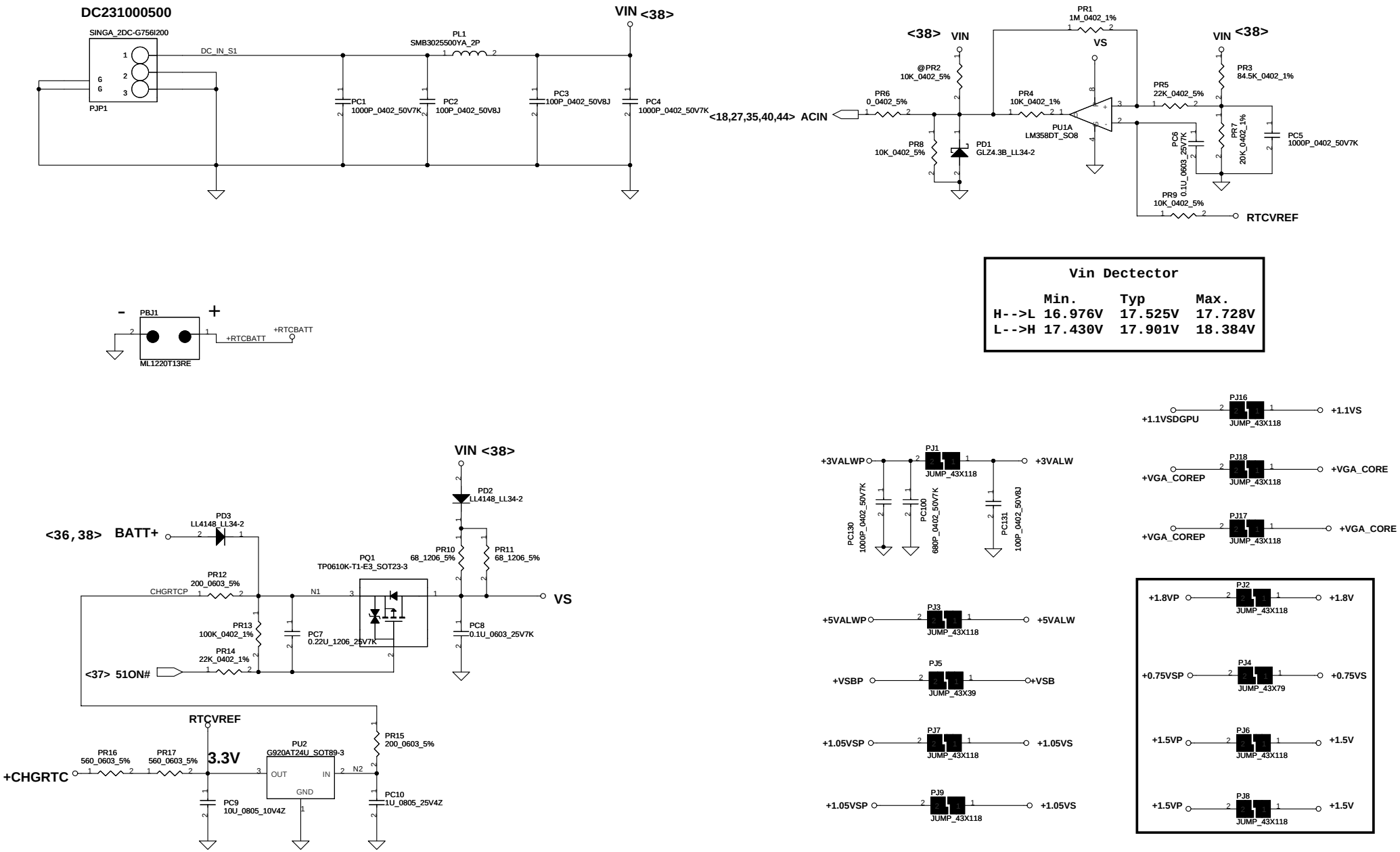

Security Classification	Compal Secret Data		
Issued Date	2009/07/17	Deciphered Date	2009/07/17

THIS SHEET OF ENGINEERING DRAWING IS THE PROPRIETARY PROPERTY OF COMPAL ELECTRONICS, INC. AND CONTAINS CONFIDENTIAL AND TRADE SECRET INFORMATION. THIS SHEET MAY NOT BE TRANSFERED FROM THE CUSTODY OF THE COMPETENT DIVISION OF R&D DEPARTMENT EXCEPT AS AUTHORIZED BY COMPAL ELECTRONICS, INC. NEITHER THIS SHEET NOR THE INFORMATION IT CONTAINS MAY BE USED BY OR DISCLOSED TO ANY THIRD PARTY WITHOUT PRIOR WRITTEN CONSENT OF COMPAL ELECTRONICS, INC.

Compal Electronics, Inc.

Title: SCHEMATIC,MB A4853

Size: Custom | Document Number: 401817 | Rev: A

Date: Monday, September 28, 2009 | Sheet 41 of 53

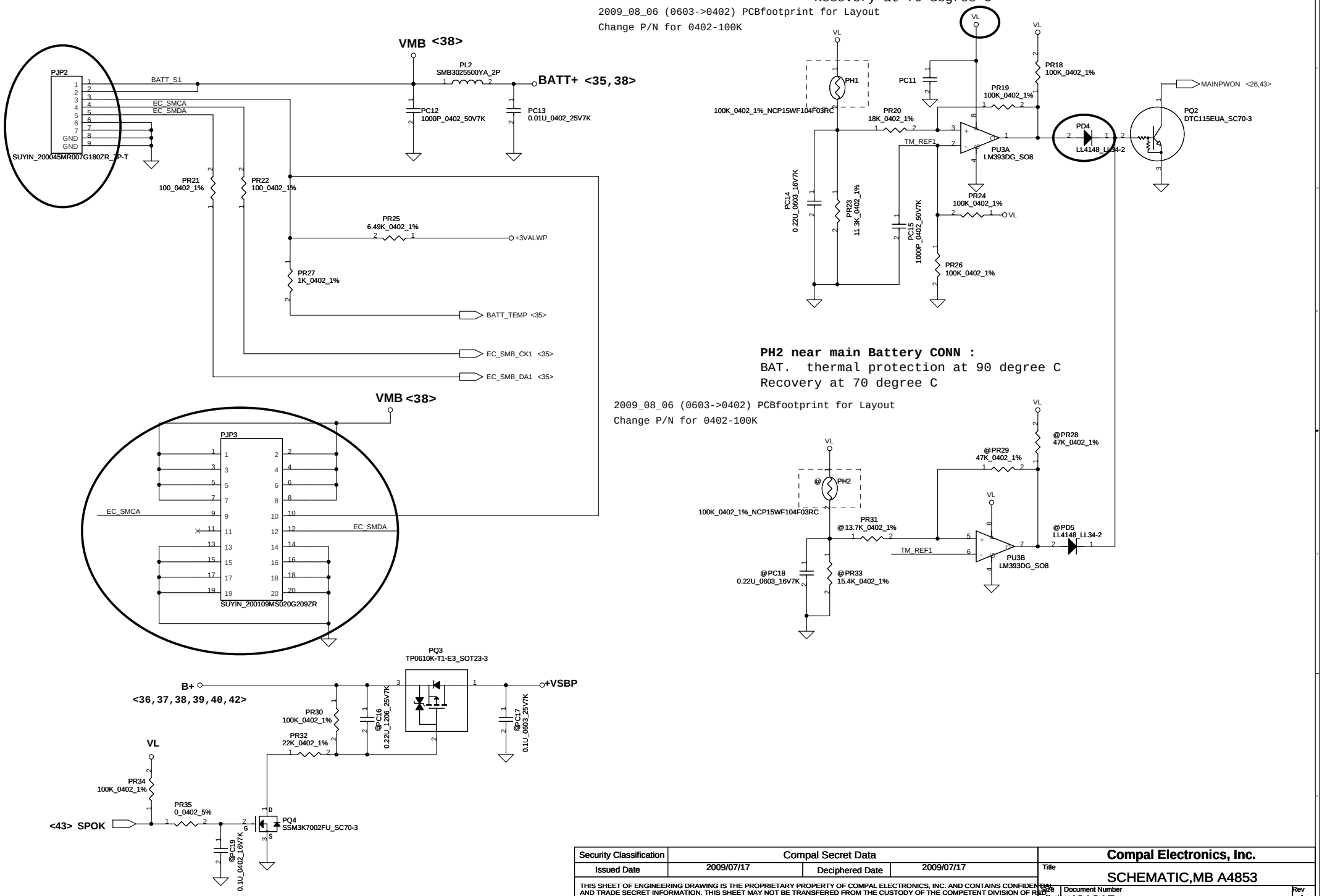

Security Classification	Compal Secret Data		
Issued Date	2009/07/17	Deciphered Date	2009/07/17

THIS SHEET OF ENGINEERING DRAWING IS THE PROPRIETARY PROPERTY OF COMPAL ELECTRONICS, INC. AND CONTAINS CONFIDENTIAL AND TRADE SECRET INFORMATION. THIS SHEET MAY NOT BE TRANSFERED FROM THE CUSTODY OF THE COMPETENT DIVISION OF R&D DEPARTMENT EXCEPT AS AUTHORIZED BY COMPAL ELECTRONICS, INC. NEITHER THIS SHEET NOR THE INFORMATION IT CONTAINS MAY BE USED BY OR DISCLOSED TO ANY THIRD PARTY WITHOUT PRIOR WRITTEN CONSENT OF COMPAL ELECTRONICS, INC.

Compal Electronics, Inc.

Title: SCHEMATIC,MB A4853

Size: Custom | Document Number: 401817 | Rev: A

Date: Monday, September 28, 2009 | Sheet 42 of 53

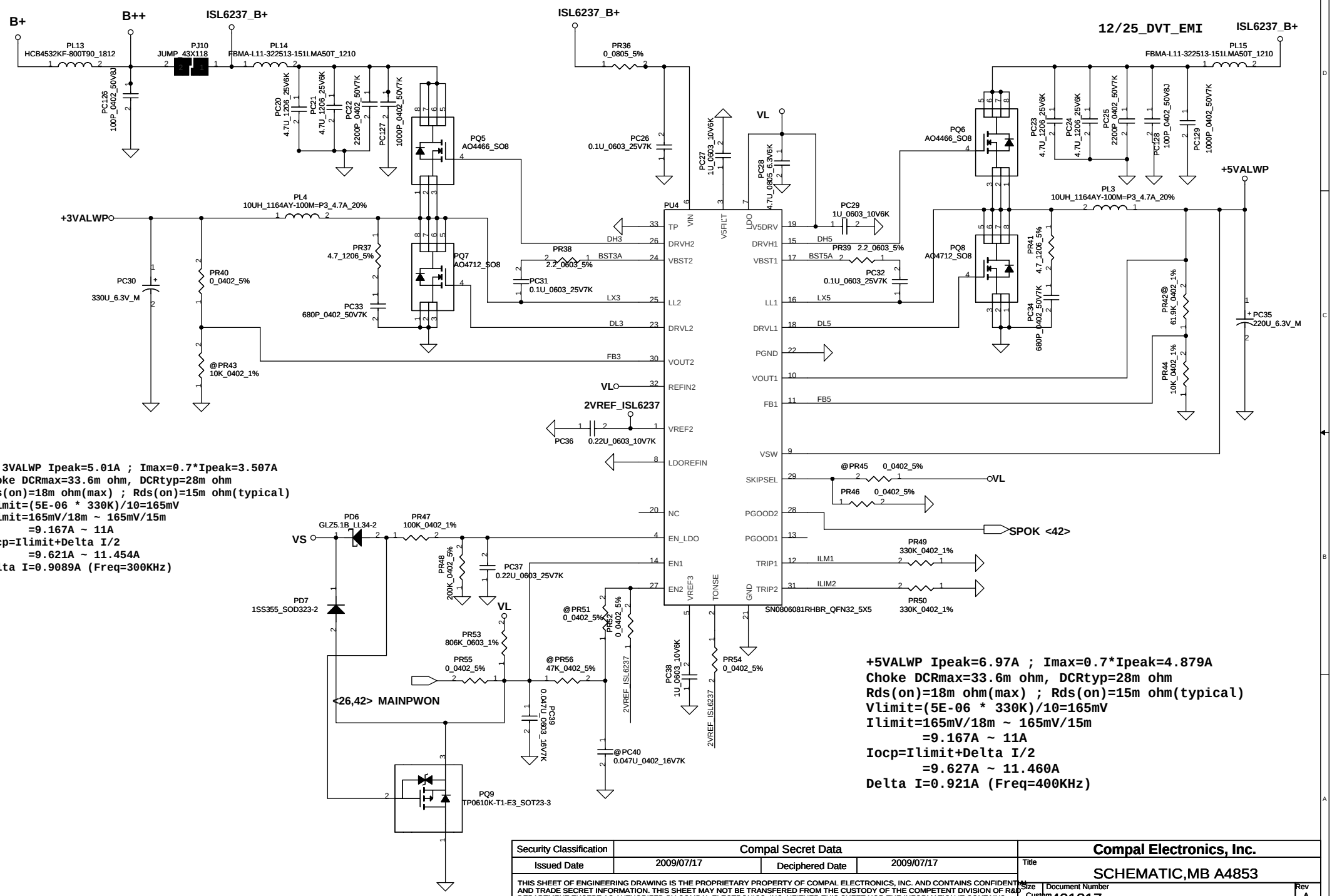

+3.3VALWP Ipeak=5.01A ; Imax=0.7*Ipeak=3.507A
Choke DCRmax=33.6m ohm, DCRtyp=28m ohm
Rds(on)=18m ohm(max) ; Rds(on)=15m ohm(typical)
Vlimit=(5E-06 * 330K)/10=165mV
Ilimit=165mV/18m ~ 165mV/15m
=9.167A ~ 11A
Iocp=Ilimit+Delta I/2
=9.621A ~ 11.454A
Delta I=0.9089A (Freq=300KHz)

+5VALWP Ipeak=6.97A ; Imax=0.7*Ipeak=4.879A
Choke DCRmax=33.6m ohm, DCRtyp=28m ohm
Rds(on)=18m ohm(max) ; Rds(on)=15m ohm(typical)
Vlimit=(5E-06 * 330K)/10=165mV
Ilimit=165mV/18m ~ 165mV/15m
=9.167A ~ 11A
Iocp=Ilimit+Delta I/2
=9.627A ~ 11.460A
Delta I=0.921A (Freq=400KHz)

Security Classification	Compal Secret Data			Compal Electronics, Inc.
Issued Date	2009/07/17	Deciphered Date	2009/07/17	Title: SCHEMATIC,MB A4853
				Size: Custom; Document Number: 401817; Rev: A
				Date: Monday, September 28, 2009; Sheet 43 of 53

THIS SHEET OF ENGINEERING DRAWING IS THE PROPRIETARY PROPERTY OF COMPAL ELECTRONICS, INC. AND CONTAINS CONFIDENTIAL AND TRADE SECRET INFORMATION. THIS SHEET MAY NOT BE TRANSFERED FROM THE CUSTODY OF THE COMPETENT DIVISION OF R&D DEPARTMENT EXCEPT AS AUTHORIZED BY COMPAL ELECTRONICS, INC. NEITHER THIS SHEET NOR THE INFORMATION IT CONTAINS MAY BE USED BY OR DISCLOSED TO ANY THIRD PARTY WITHOUT PRIOR WRITTEN CONSENT OF COMPAL ELECTRONICS, INC.

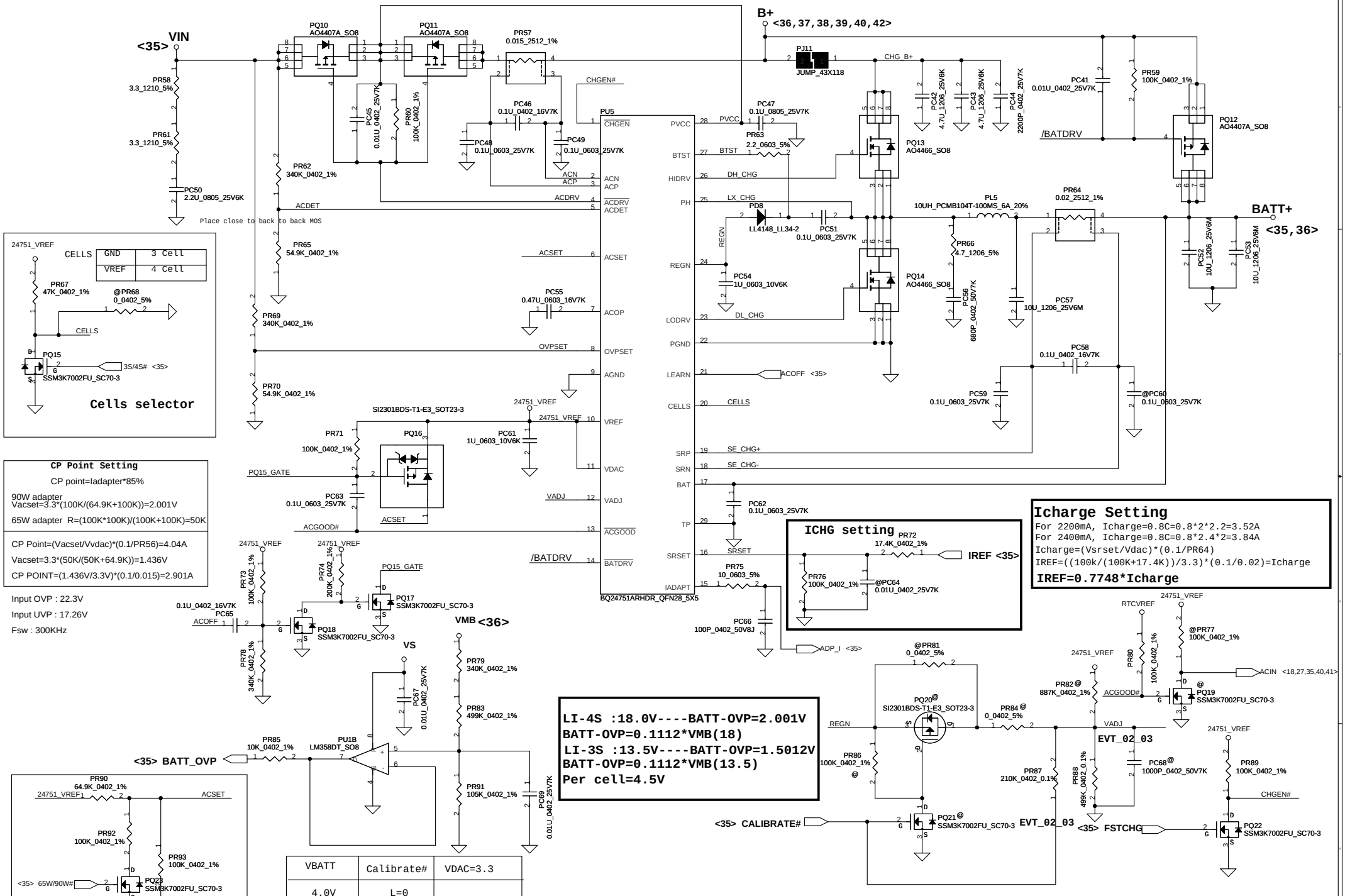

VBATT	Calibrate#	VDAC=3.3
4.0V	L=0	
4.2V	1.8755V	
4.3V	2.8132V	
4.35V	H=3.3	

Security Classification	Compal Secret Data		
Issued Date	2009/07/17	Deciphered Date	2009/07/17

THIS SHEET OF ENGINEERING DRAWING IS THE PROPRIETARY PROPERTY OF COMPAL ELECTRONICS, INC. AND CONTAINS CONFIDENTIAL AND TRADE SECRET INFORMATION. THIS SHEET MAY NOT BE TRANSFERED FROM THE CUSTODY OF THE COMPETENT DIVISION OF R&D DEPARTMENT EXCEPT AS AUTHORIZED BY COMPAL ELECTRONICS, INC. NEITHER THIS SHEET NOR THE INFORMATION IT CONTAINS MAY BE USED BY OR DISCLOSED TO ANY THIRD PARTY WITHOUT PRIOR WRITTEN CONSENT OF COMPAL ELECTRONICS, INC.

Compal Electronics, Inc.

Title: SCHEMATIC,MB A4853

Size: Custom | Document Number: 401817 | Rev: A

Date: Monday, September 28, 2009 | Sheet 44 of 53

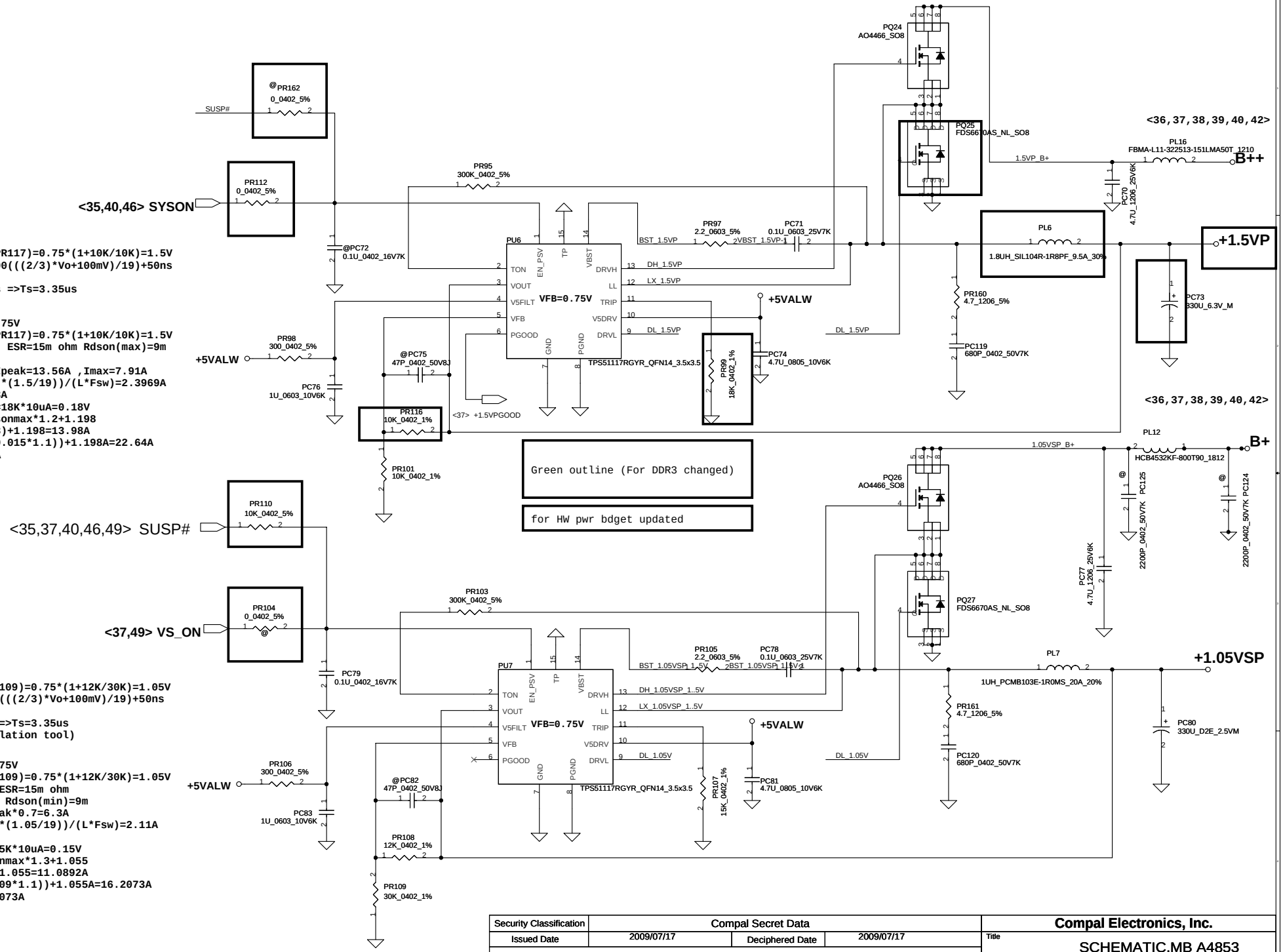

VFB=0.75V
Vo=VFB*(1+PR116/PR117)=0.75*(1+10K/10K)=1.5V
Ton=19*e-12*143000(((2/3)*Vo+100mV)/19)+50ns
=2.645e-7 us
=>Vo/Vin=D=Ton/Ts =>Ts=3.35us
Fsw=262KHz

<Vo=1.5V> VFB=0.75V
Vo=VFB*(1+PR116/PR117)=0.75*(1+10K/10K)=1.5V
Fsw=262KHz Cout ESR=15m ohm Rdson(max)=9m
Rdson(min)=11.5m
Ipeak=11.3A, 1.2Ipeak=13.56A ,Imax=7.91A
Delta I=((19-1.5)*(1.5/19))/(L*Fsw)=2.3969A
=>1/2DeltaI=1.198A
Vtrip=Rtrip*10uA=18K*10uA=0.18V
Iocpmin=Vtrip/Rdsonmax*1.2+1.198
=0.075/(0.018*1.3)+1.198=13.98A
Iocpmax=(0.075/(0.015*1.1))+1.198A=22.64A
Iocp=13.98~22.64A

Green outline (For DDR3 changed)

for HW pwr bdget updated

VFB=0.75V
Vo=VFB*(1+PR108/PR109)=0.75*(1+12K/30K)=1.05V
Ton=19*e-12*143000(((2/3)*Vo+100mV)/19)+50ns
=2.645e-7 us
=>Vo/Vin=D=Ton/Ts =>Ts=3.35us
Fsw=261KHz(by caculation tool)

<Vo=1.05V> VFB=0.75V
Vo=VFB*(1+PR108/PR109)=0.75*(1+12K/30K)=1.05V
Fsw=261KHz Cout ESR=15m ohm
Rdson(max.)=11.5m Rdson(min)=9m
Ipeak=9A, Imax=Ipeak*0.7=6.3A
Delta I=((19-1.05)*(1.05/19))/(L*Fsw)=2.11A
=>1/2DeltaI=1.055A
Vtrip=Rtrip*10uA=15K*10uA=0.15V
Iocpmin=Vtrip/Rdsonmax*1.3+1.055
=0.15/(0.011*1.3)+1.055=11.0892A
Iocpmax=(0.15/(0.009*1.1))+1.055A=16.2073A
Iocp=11.0892A~16.2073A

Security Classification	Compal Secret Data		
Issued Date	2009/07/17	Deciphered Date	2009/07/17

THIS SHEET OF ENGINEERING DRAWING IS THE PROPRIETARY PROPERTY OF COMPAL ELECTRONICS, INC. AND CONTAINS CONFIDENTIAL AND TRADE SECRET INFORMATION. THIS SHEET MAY NOT BE TRANSFERED FROM THE CUSTODY OF THE COMPETENT DIVISION OF R&D DEPARTMENT EXCEPT AS AUTHORIZED BY COMPAL ELECTRONICS, INC. NEITHER THIS SHEET NOR THE INFORMATION IT CONTAINS MAY BE USED BY OR DISCLOSED TO ANY THIRD PARTY WITHOUT PRIOR WRITTEN CONSENT OF COMPAL ELECTRONICS, INC.

Compal Electronics, Inc.

Title: SCHEMATIC,MB A4853

Size: Custom | Document Number: 401817 | Rev: A

Date: Monday, September 28, 2009 | Sheet 45 of 53

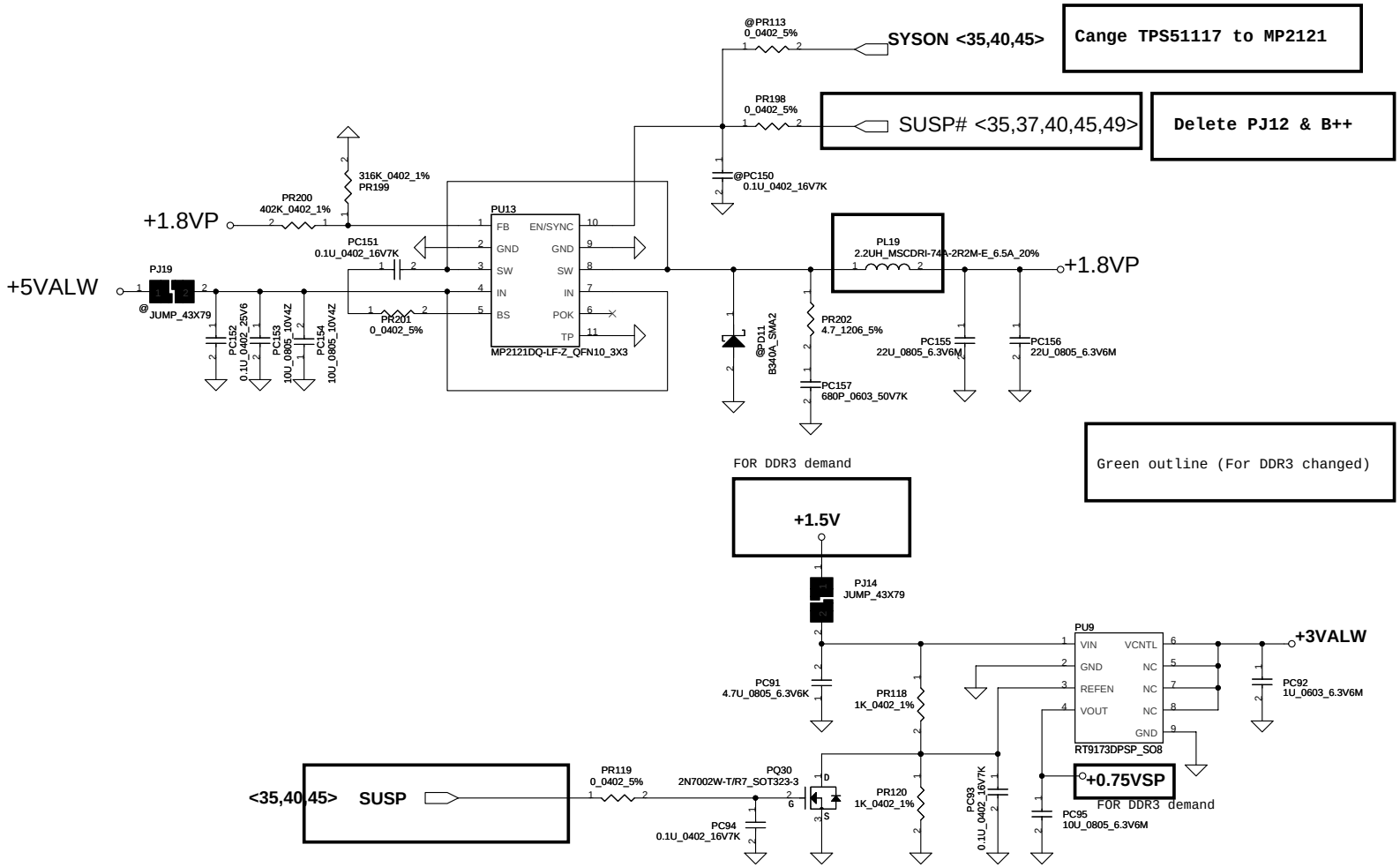

Security Classification	Compal Secret Data		
Issued Date	2009/07/17	Deciphered Date	2009/07/17

THIS SHEET OF ENGINEERING DRAWING IS THE PROPRIETARY PROPERTY OF COMPAL ELECTRONICS, INC. AND CONTAINS CONFIDENTIAL AND TRADE SECRET INFORMATION. THIS SHEET MAY NOT BE TRANSFERED FROM THE CUSTODY OF THE COMPETENT DIVISION OF R&D DEPARTMENT EXCEPT AS AUTHORIZED BY COMPAL ELECTRONICS, INC. NEITHER THIS SHEET NOR THE INFORMATION IT CONTAINS MAY BE USED BY OR DISCLOSED TO ANY THIRD PARTY WITHOUT PRIOR WRITTEN CONSENT OF COMPAL ELECTRONICS, INC.

Compal Electronics, Inc.

Title: SCHEMATIC,MB A4853

Size: Custom | Document Number: 401817 | Rev: A

Date: Monday, September 28, 2009 | Sheet 46 of 53

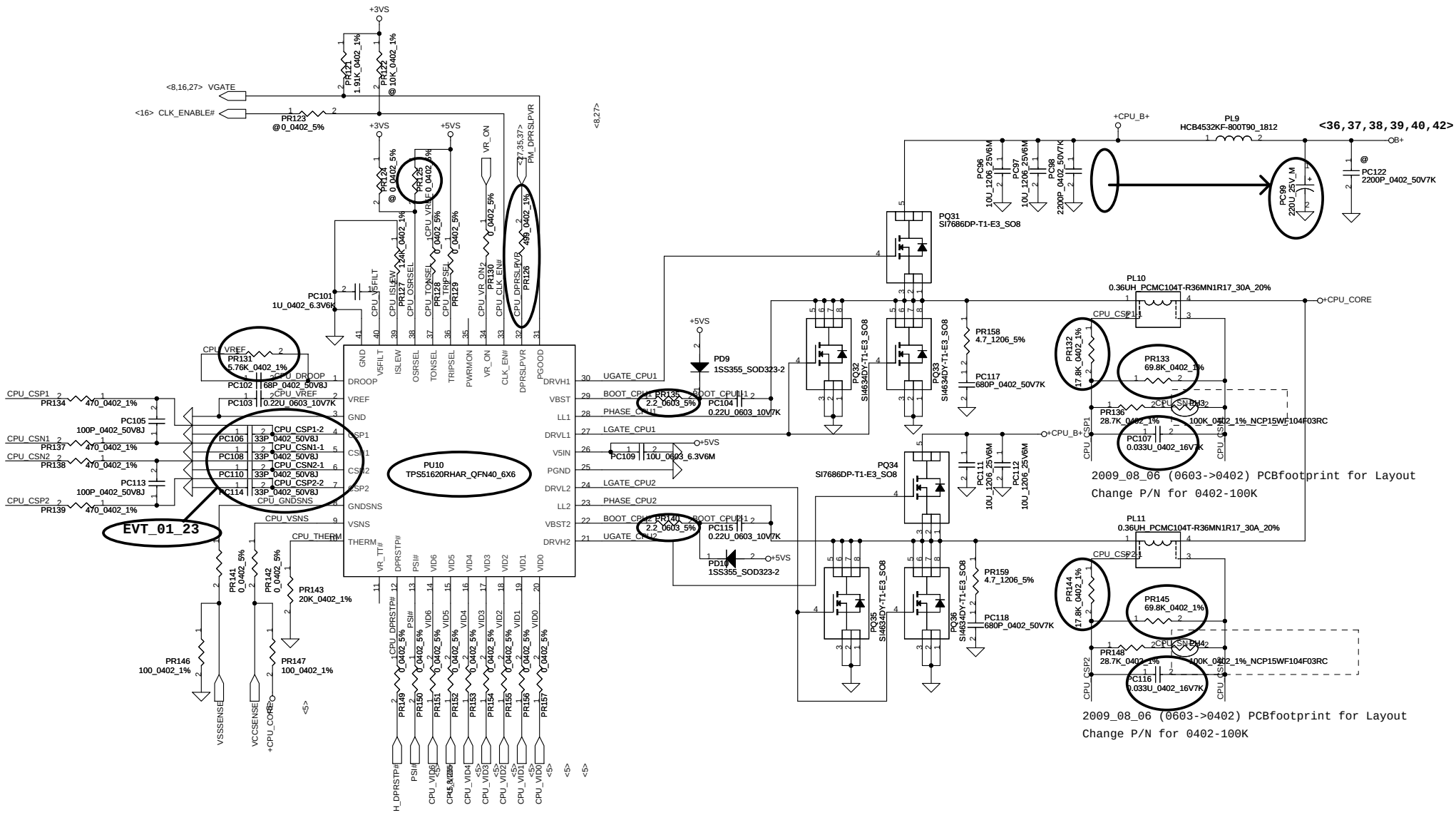

Security Classification	Compal Secret Data		
Issued Date	2009/07/17	Deciphered Date	2009/07/17

THIS SHEET OF ENGINEERING DRAWING IS THE PROPRIETARY PROPERTY OF COMPAL ELECTRONICS, INC. AND CONTAINS CONFIDENTIAL AND TRADE SECRET INFORMATION. THIS SHEET MAY NOT BE TRANSFERED FROM THE CUSTODY OF THE COMPETENT DIVISION OF R&D DEPARTMENT EXCEPT AS AUTHORIZED BY COMPAL ELECTRONICS, INC. NEITHER THIS SHEET NOR THE INFORMATION IT CONTAINS MAY BE USED BY OR DISCLOSED TO ANY THIRD PARTY WITHOUT PRIOR WRITTEN CONSENT OF COMPAL ELECTRONICS, INC.

Compal Electronics, Inc.

Title: SCHEMATIC,MB A4853

Size: Custom | Document Number: 401817 | Rev: A

Date: Monday, September 28, 2009 | Sheet 47 of 53

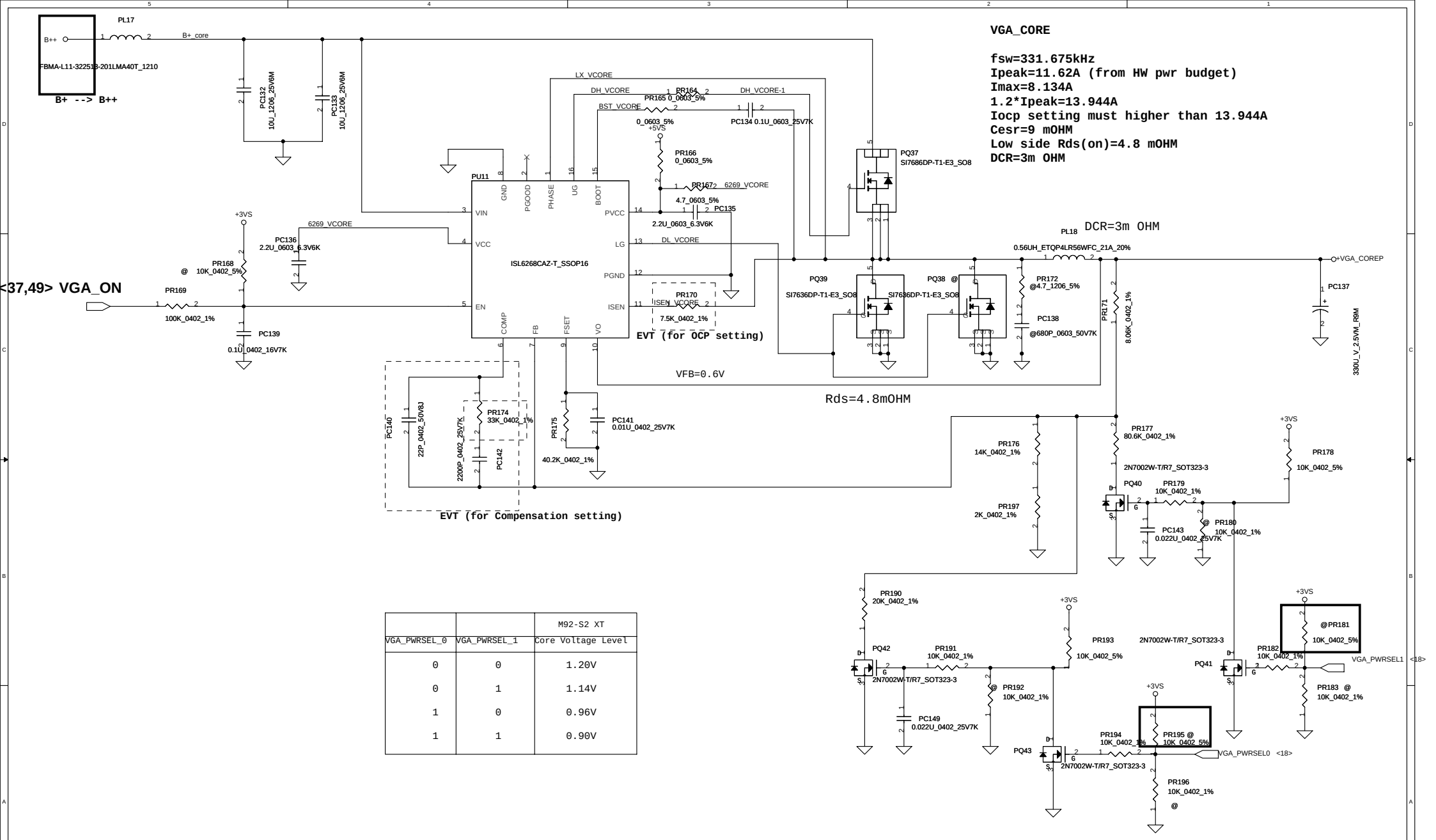

		M92-S2 XT
VGA_PWRSEL_0	VGA_PWRSEL_1	Core Voltage Level
0	0	1.20V
0	1	1.14V
1	0	0.96V
1	1	0.90V

Security Classification	Compal Secret Data			Compal Electronics, Inc.
Issued Date	2009/07/17	Deciphered Date	2009/07/17	Title: SCHEMATIC,MB A4853

THIS SHEET OF ENGINEERING DRAWING IS THE PROPRIETARY PROPERTY OF COMPAL ELECTRONICS, INC. AND CONTAINS CONFIDENTIAL AND TRADE SECRET INFORMATION. THIS SHEET MAY NOT BE TRANSFERED FROM THE CUSTODY OF THE COMPETENT DIVISION OF R&D DEPARTMENT EXCEPT AS AUTHORIZED BY COMPAL ELECTRONICS, INC. NEITHER THIS SHEET NOR THE INFORMATION IT CONTAINS MAY BE USED BY OR DISCLOSED TO ANY THIRD PARTY WITHOUT PRIOR WRITTEN CONSENT OF COMPAL ELECTRONICS, INC.

Size	Document Number	Rev
Custom	401817	A

Date: Monday, September 28, 2009 | Sheet 48 of 53

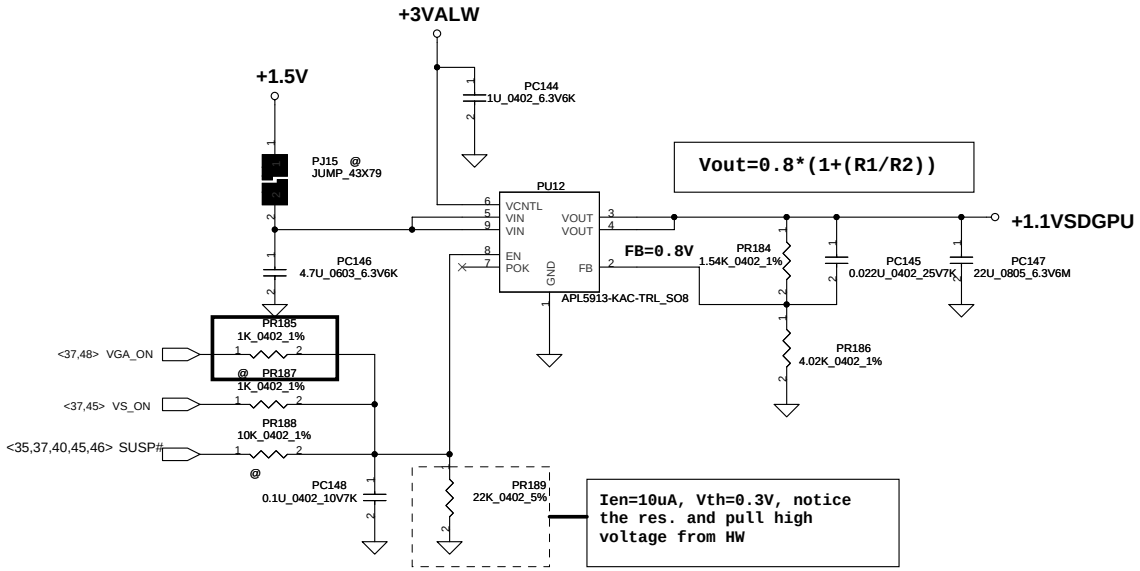

Security Classification	Compal Secret Data		
Issued Date	2009/07/17	Deciphered Date	2009/07/17

THIS SHEET OF ENGINEERING DRAWING IS THE PROPRIETARY PROPERTY OF COMPAL ELECTRONICS, INC. AND CONTAINS CONFIDENTIAL AND TRADE SECRET INFORMATION. THIS SHEET MAY NOT BE TRANSFERED FROM THE CUSTODY OF THE COMPETENT DIVISION OF R&D DEPARTMENT EXCEPT AS AUTHORIZED BY COMPAL ELECTRONICS, INC. NEITHER THIS SHEET NOR THE INFORMATION IT CONTAINS MAY BE USED BY OR DISCLOSED TO ANY THIRD PARTY WITHOUT PRIOR WRITTEN CONSENT OF COMPAL ELECTRONICS, INC.

Compal Electronics, Inc.

Title: SCHEMATIC,MB A4853

Size: Custom | Document Number: 401817 | Rev: A

Date: Monday, September 28, 2009 | Sheet 49 of 53

Version change list (P.I.R. List)

Item	Fixed Issue	Reason for change	Rev.	PG#	Modify List	Date	Phase
1		Add PC57 :10U_1206_25V_6M	0.1	38	Add PC57 :10U_1206_25V_6M	20080902	EVT
2		Add snubber for EMI	0.1	42	Add snubber for EMI	20080915	EVT
3		Shift PC99 from +cpu_B+ to B+	0.1	42	Shift PC99 from +cpu_B+ to B+	20080915	EVT
4		Add PJ15 to B+	0.1	39	Add PJ15 to B+	20080915	EVT
5		PR135 and PR140 change to 0_0603_5%	0.1	42	PR135 and PR140 change to 0_0603_5%	20080915	EVT
6	Charger feedback trace too long	ADD PC49	0.2	38	ADD PC49	20081124	DVT
7	Power sequence error	+1.5VP: enable pin change from SUSP# to SYSON +0.9VSP: enable pin change from SUSP# to SUSP	0.2	40	+1.5VP: enable pin change from SUSP# to SYSON +0.9VSP: enable pin change from SUSP# to SUSP	20081124	DVT
8	Load line over spec	PR131: change to 5.76K_0402_1%	0.2	42	PR131: change to 5.76K_0402_1%	20081124	DVT
9	3D hang	Charger PR63:change to 2.2_0603_5% PR66:Add 4.7_1206_5% PC56:Add 680P_0402_50V7K	0.2	38	Charger PR63:change to 2.2_0603_5% PR66:Add 4.7_1206_5% PC56:Add 680P_0402_50V7K	20081124	DVT
10	3D hang	+1.8VP PR97:change to 2.2_0603_5% PR160:Add 4.7_1206_5% PC119:Add 680P_0402_50V7K	0.2	39	+1.8VP PR97:change to 2.2_0603_5% PR160:Add 4.7_1206_5% PC119:Add 680P_0402_50V7K	20081124	DVT
11	3D hang	+1.05VSP PR105:change to 2.2_0603_5% PR161:Add 4.7_1206_5% PC120:Add 680P_0402_50V7K Add bead between B+ and 1.05VSP_B+	0.2	39	+1.05VSP PR105:change to 2.2_0603_5% PR161:Add 4.7_1206_5% PC120:Add 680P_0402_50V7K Add bead between B+ and 1.05VSP_B+	20081124	DVT
12	EMI solution	+5VALW/+3VALW PR37: Add 4.7_1206_5% PR41: Add 4.7_1206_5% PC33: Add 680P_0402_50V7K PC34: Add 680P_0402_50V7K PR38: change to 2.2_0603_5% PR39: change to 2.2_0603_5%	0.2	37	+5VALW/+3VALW PR37: Add 4.7_1206_5% PR41: Add 4.7_1206_5% PC33: Add 680P_0402_50V7K PC34: Add 680P_0402_50V7K PR38: change to 2.2_0603_5% PR39: change to 2.2_0603_5%	20081124	DVT
13	EMI solution	+CPU CORE PR158: Add 4.7_1206_5% PR159: Add 4.7_1206_5% PC117: Add 680P_0402_50V7K PC118: Add 680P_0402_50V7K PR135: change to 2.2_0603_5% PR140: change to 2.2_0603_5%	0.2	42	+CPU CORE PR158: Add 4.7_1206_5% PR159: Add 4.7_1206_5% PC117: Add 680P_0402_50V7K PC118: Add 680P_0402_50V7K PR135: change to 2.2_0603_5% PR140: change to 2.2_0603_5%	20081124	DVT
16	EMI solution	+CPU CORE PC122: Reserve 2200P_0402_50V7K on B+	0.2	42	+CPU CORE PC122: Reserve 2200P_0402_50V7K on B+	20081124	DVT
17	EMI solution	+1.05VSP PR105 : change to 2.2_0603_5% PL12 : Add HCB4532KF-800T90_1812 PC124: Reserve 2200P_0402_50V7K on B+ PC125: Reserve 2200P_0402_50V7K on B+	0.2	39	+1.05VSP PR105 : change to 2.2_0603_5% PL12 : Add HCB4532KF-800T90_1812 PC124: Reserve 2200P_0402_50V7K on B+ PC125: Reserve 2200P_0402_50V7K on B+	20081124	DVT

THIS SHEET OF ENGINEERING DRAWING IS THE PROPRIETARY PROPERTY OF COMPAL ELECTRONICS, INC. AND CONTAINS CONFIDENTIAL AND TRADE SECRET INFORMATION. THIS SHEET MAY NOT BE TRANSFERED FROM THE CUSTODY OF THE COMPETENT DIVISION OF R&D DEPARTMENT EXCEPT AS AUTHORIZED BY COMPAL ELECTRONICS, INC. NEITHER THIS SHEET NOR THE INFORMATION IT CONTAINS MAY BE USED BY OR DISCLOSED TO ANY THIRD PARTY WITHOUT PRIOR WRITTEN CONSENT OF COMPAL ELECTRONICS, INC.

Security Classification	Compal Secret Data		Compal Electronics, Inc.
Issued Date	2009/07/01	Deciphered Date	2010/07/01
Title	SCHEMATIC,MB A4853		
Size	Custom	Document Number	401817
Rev	A		
Date:	Monday, September 28, 2009	Sheet	50 of 53

Item	Fixed Issue	Reason for change	Rev.	PG#	Modify List	Date	Phase
18	Battery & HW solution	Charger PQ20:Reserve(@)SI2301BDS-T1-E3_SOT23-3 PQ21:Reserve(@)SSM3K7002FU_SC70-3 PR82:Reserve(@)887K_0402_1% PR84:Reserve(@)0_0402_5% PC68:Reserve(@)1000P_0402_50V7K PR87:change to 210K_0402_1% PR88:change to 499K_0402_1% +1.05VSP PR104: Reserve(@)0_0402_5% PR110: change to 10K_0402_5% PR79 : Add 0.1U_0402_16V7K +1.5VP PR112: Reserve(@) 0_0402_5%	0.2	38 39 40	Charger PQ20:Reserve(@)SI2301BDS-T1-E3_SOT23-3 PQ21:Reserve(@)SSM3K7002FU_SC70-3 PR82:Reserve(@)887K_0402_1% PR84:Reserve(@)0_0402_5% PC68:Reserve(@)1000P_0402_50V7K PR87:change to 210K_0402_1% PR88:change to 499K_0402_1% +1.05VSP PR104: Reserve(@)0_0402_5% PR110: change to 10K_0402_5% PR79 : Add 0.1U_0402_16V7K +1.5VP PR112: Reserve(@) 0_0402_5%	20081124	DVT
19	EMI soultion	+3VALWP/+3VALW PC100: 680P_0402_50V7K PC130: 1000P_0402_50V_7K PC131: 1000P_0402_50V_8J +1.5VP ADD PR113: 2.2_0603_5% ADD PR163: 4.7_1206_5% ADD PC121: 680P_0402_50V7K ADD PL16 :FBMA-L11-322513-151LMA50T_1210	0.3	35 40	+3VALWP/+3VALW PC100: 680P_0402_50V7K PC130: 1000P_0402_50V_7K PC131: 1000P_0402_50V_8J +1.5VP ADD PR113: 2.2_0603_5% ADD PR163: 4.7_1206_5% ADD PC121: 680P_0402_50V7K ADD PL16 :FBMA-L11-322513-151LMA50T_1210	20081224	PVT
20	POWER Solution	+3VALWP/+5VALWP RT8206- Fix output 5V for HW no HDMI	0.3	37	+3VALWP/+5VALWP PR42: Reserve 61.9K_0402_1%	20090111	PVT

COMPAL ELECTRONICS

Title: SCHEMATIC,MB A4853

Size | Document Number: 401817 | Rev: A

Date: Monday, September 28, 2009 | Sheet 51 of 53

Version change list (P.I.R. List) for PWR

Item	Fixed Issue	Reason for change	Rev.	PG#	Modify List	Date	Phase
21	EMI solution	Reduce the Noise	0.3	37	Add PL 13 (HCB4532KF-800T90_1812) Add PL 14 (FBMA-L11-322513-151LMA50T_1210) Add PL 15 (FBMA-L11-322513-151LMA50T_1210) Add PC126 (100P_0402_50V8J) Add PC128 (100P_0402_50V8J) Add PC129 (1000P_0402_50V7K)	20090112	PVT
22	Battery solution	Adjust battery voltage	0.3	38	Reserve PR86 (100K_0402_1%)	20090112	PVT
23	Saturation current	1.8u choke saturation current too small	0.3	39	change PL7 to 1UH_PCMB103E-1R0MS_20A_20%	20090113	PVT
24	GP BOM	Tolerance: K:+-10% ; J:+-5%	0.4	42	Change PC106 to 33P_0402_50V8J Change PC108 to 33P_0402_50V8J Change PC110 to 33P_0402_50V8J Change PC114 to 33P_0402_50V8J	20090123	PVT

COMPAL ELECTRONICS

Title: SCHEMATIC,MB A4853

Size: A | Document Number: 401817 | Rev: A

Date: Monday, September 28, 2009 | Sheet 52 of 53

8/21 For Change DDR3

1. P.40 Add R612, Q59 ; Unstuff R244 ; Remove R260, R253, Q13, Q14 ; stuff C309, C313, C315, C310, C314, R266, Q52, Q51, R267, U12 for +1.5V
2. P.40 Unstuff R611, Q58 for +0.75VS ; Add J3 for +1.8V ;
3. P.37 Unstuff R609, R610 ; Add R608, R606, R607, D33, U42, Q57 for DDR3
4. P.23 Unstuff R411, D20 ; Add R613 for BKOFF#
5. P.25 Unstuff U8, R83 ; Add R614 for PCI_RST#

9/1

1. P.22 Unstuff R544, R545 for No HDMI Audio Function
2. P.40 Change R558 120K ohm as 200K ohm ; Change R200K ohm as 270K ohm

9/17

1. P.40 Unstuff C882, C883, C884, C885, C886, R275, Q54, U40 for 1.8VS
2. P.31 Change C81, C82 27pF as 33pF for Xtal 25MHz(TXC suggest value)
3. P.26 Change C163, C164 18pF as 15pF for Xtal 32.768kHz (TXC suggest value)
4. P.37 Unstuff C407, C880, C881, R560, D30
5. P.41 Unstuff R580, U41
6. P.35 Change R273 8.2k ohm as 18k ohm for Board ID

Security Classification	Compal Secret Data		
Issued Date	2009/07/01	Deciphered Date	2010/07/01

THIS SHEET OF ENGINEERING DRAWING IS THE PROPRIETARY PROPERTY OF COMPAL ELECTRONICS, INC. AND CONTAINS CONFIDENTIAL AND TRADE SECRET INFORMATION. THIS SHEET MAY NOT BE TRANSFERED FROM THE CUSTODY OF THE COMPETENT DIVISION OF R&D DEPARTMENT EXCEPT AS AUTHORIZED BY COMPAL ELECTRONICS, INC. NEITHER THIS SHEET NOR THE INFORMATION IT CONTAINS MAY BE USED BY OR DISCLOSED TO ANY THIRD PARTY WITHOUT PRIOR WRITTEN CONSENT OF COMPAL ELECTRONICS, INC.

Compal Electronics, Inc.

Title: SCHEMATIC,MB A4853

Size: Custom | Document Number: 401817 | Rev: A

Date: Monday, September 28, 2009 | Sheet 53 of 53